higher education & training

Department:
Higher Education and Training
REPUBLIC OF SOUTH AFRICA

MARKING GUIDELINE

NATIONAL CERTIFICATE (VOCATIONAL)

ELECTRONIC CONTROL AND DIGITAL ELECTRONICS
NQF LEVEL 2

2 March 2020

This marking guideline consists of 6 pages.

Copyright reserved

QUESTION 1

1.1

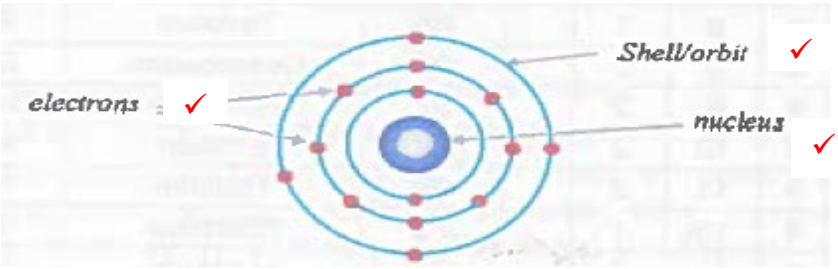

(3)

1.2 1.2.1 5W 4700✓ Ω✓ ± 5%✓

1.2.2 10000✓ pF✓ ±10%✓

(3 × 2) (6)

1.3 1.3.1 Electrically operated switch used to effect changes in an independent circuit

1.3.2 Stores an electrical charge and releases or discharges it when needed

1.3.3 Opposes changes in current flow and stores electrical energy as a magnetic field

1.3.4 Step up or step down the voltage of a circuit so that it can be used as another value of voltage

1.3.5 Limits or reduces the current flowing through the circuit and protects other components from overheating

(5 × 1) (5)

1.4 Pure material to which no impurities have been added.✓
Example: silicon, germanium✓ (2)

1.5 1.5.1 Maximum amount of current the diode can handle when forward-biased

1.5.2 Maximum voltage level necessary to produce the desired forward-current level

(2 × 2) (4)

1.6

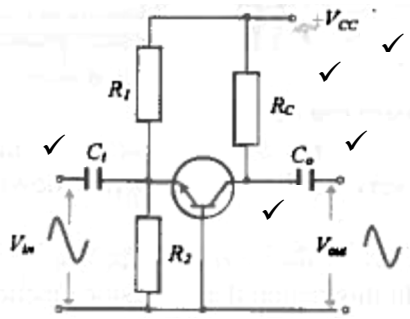

(5)
[25]

QUESTION 2

2.1 2.1.1 Analogue or linear ICs work by processing continuous signals.✓
Example: operational amplifiers and regulators✓

2.1.2 Digital ICs operate at only a few defined levels or states.✓
Example: logic gates✓

(2 × 2) (4)

2.2 Converts varying input voltage and produces a constant regulated output voltage (2)

2.3
- Switch the meter to the highest resistance range and connect the test leads.
- The meter needle deflects from infinity but then returns slowly until it goes to (nearly) infinity.
- If the capacitor is shorted it will never change.
- If it is open the resistance will be infinite immediately and won't change. (4)

2.4

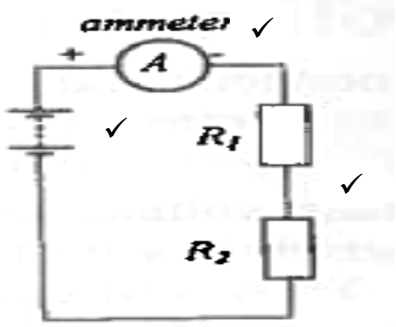

(3)

2.5 Solder sucker or solder wick (1)

2.6
- Never leave a soldering iron plugged in and unattended.
- Do not solder components unless the equipment is disconnected from the power supply circuit.
- Do not shake an iron to remove excess solder.
- Solder over the bench top to prevent the hot solder from dropping on the operator's legs.
- Never touch the element or tip of the soldering iron. Hold wires to be heated with tweezers or clamps.
- Keep the cleaning sponge wet during use.
- Always return the soldering iron to its stand when not in use. Never put it down on the workbench.
- Turn unit off or unplug it when not in use.

(Any 4 × 1) (4)

2.7 $R_T = R_{15\Omega} + R_{27\Omega} + R_{33\Omega}$
$= 15\Omega + 27\Omega + 33\Omega$✓
$= 75\Omega$✓ (2)
[20]

QUESTION 3

3.1
- Greater noise immunity
- Cheaply and easily produced
- Do not get corrupted by noise
- Use less bandwidth
- Can be encrypted
- Enable transmission of signals over a long distance (Any 3 × 1) (3)

3.2 When a digital signal goes from its normal LOW level to its HIGH level and back to its LOW level, a pulse is generated.✓ Such a pulse is known as a positive going pulse.✓
If the voltage changes from its normal HIGH level to its LOW level and back to its HIGH level✓ a negative going pulse is generated.✓ (4)

3.3
$$\begin{array}{ccccccc} & 1 & 1 & 1 & 0 & 1 \\ weight & 2^4 & 2^3 & 2^2 & 2^1 & 2^0 \end{array}$$✓
$= (1 \times 16) + (1 \times 8) + (1 \times 4) + (0 \times 2) + (1 \times 1)$ ✓
$= 16 + 8 + 4 + 1$✓
$= 29_{10}$✓ (4)

3.4
$$\begin{array}{r} 1\ 0\ 1\ 1\ 1 \\ +\ 1\ 1\ 0\ 1\ 1 \\ \hline = \underline{1\ 1\ 0\ 0\ 1\ 0} \end{array}$$✓✓ (2)

3.5 A parity bit is used for the purpose of identifying whether the bits being moved arrived successfully. (2)

3.6 3.6.1 F
3.6.2 E
3.6.3 A
3.6.4 C
3.6.5 D

(5 × 1) (5)

3.7

A	**B**	**L**
0	0	1✓
0	1	0✓
1	0	0✓
1	1	0✓

(4)

3.8

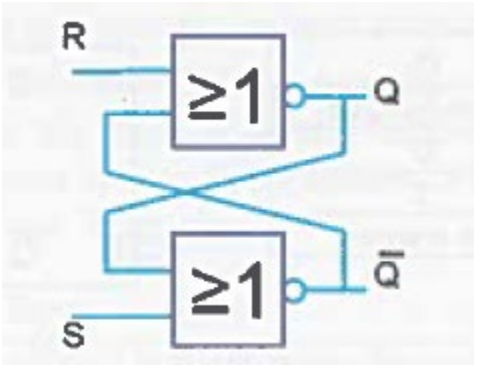

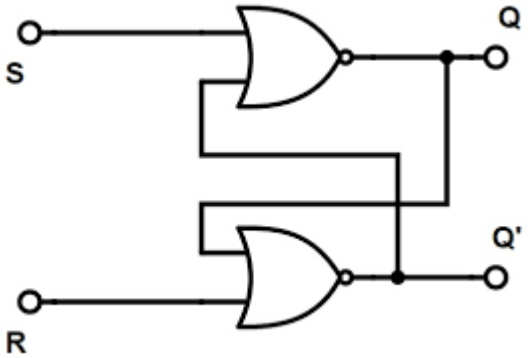

(accept any) (4)

3.9

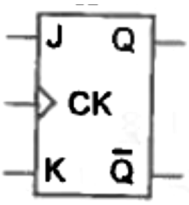

(2)

3.10 Master-slave flip flop is designed using two separate flip flops. Out of these, one acts as the master and the other as a slave.✓ These two flip-flops are connected in a series connection.✓ The output of the master J-K flip flop is fed to the input of the slave J-K flip-flop.✓ The output of the slave J-K flip-flop is given as a feedback to the input of the master J-K flip flop.✓ The clock pulse [Clk] is given to the master J-K flip flop✓ and it is sent through a NOT Gate and thus inverted before passing it to the slave J-K flip flop.✓

(5)
[35]

QUESTION 4

4.1 4.1.1 Controls and directs all the activities of the computer, transmitting, receiving and processing data constantly

4.1.2 Temporally used to store information that the computer is currently working with

4.1.3 Provides power to working parts in the computer

4.1.4 Permanent memory storage used by computer for important data that does not change

4.1.5 Main circuit board to which all other internal components are connected

(5 × 1) (5)

4.2 4.2.1 False
4.2.2 False
4.2.3 False
4.2.4 True
4.2.5 True

(5 × 1) (5)
[10]

QUESTION 5

5.1 5.1.1 Device that measures the temperature of things

5.1.2 Transparent glass used to measure the level of liquid inside the tank

5.1.3 Instrument used to measure the pressure of a fluid

(3 × 1) (3)

5.2
- When incident light falls on the device✓ its resistance decreases causing a current to flow through the device.✓
- When there is no light falling on the device✓ the resistance increases causing no current flow on the device.✓ (4)

5.3
- Photovoltaic cell
- Photoconductive cell
- Photoemissive cell (3)

[10]

TOTAL: 100

Copyright reserved