higher education & training

Department:
Higher Education and Training
REPUBLIC OF SOUTH AFRICA

NATIONAL CERTIFICATE (VOCATIONAL)

ELECTRICAL WORKMANSHIP
NQF LEVEL 4

(12041014)

4 December 2020 (X-paper)
09:00–12:00

This question paper consists of 6 pages.

297Q1N2004

Copyright reserved

TIME: 3 HOURS
MARKS: 100

INSTRUCTIONS AND INFORMATION

1. Answer all the questions.
2. Read all the questions carefully.
3. Number the answers according to the numbering system used in this question paper.
4. Write neatly and legibly.

Copyright reserved

QUESTION 1

1.1 Before performing any electrical work, a permit to do the work should be obtained as part of safe work practice.

State SIX things that should be stated in this permit. (6)

1.2 The touch/step potential is one basic way that electric current travels through the human body.

1.2.1 Explain the touch/step potential current path through the human body. (2)

1.2.2 State THREE effects that this current has on the body. (3)

1.3 Briefly explain the most effective method of hazard control in the work environment. (1)

1.4 Name FOUR common hazardous substances that may cause harm to workers in the workplace. (4)

1.5 You are the supervisor of the electrical workshop and are required to train a new intake of electrical apprentices on the importance of good housekeeping and safety.

State FOUR specific things that workers should do to make their workplace safer. (4)

[20]

QUESTION 2

2.1 All electrical installations in South Africa must conform to the SANS 10142-1 regulations.

2.1.1 What does the acronym SANS stand for?

2.1.2 Give an alternative name for the SANS 10142-1 regulations.

2.1.3 Who is responsible for publishing the SANS 10142-1 regulations?

2.1.4 The publisher of the SANS 10142-1 regulations is a division of a well-known organisation.

Name this organisation.

(4 × 1) (4)

Copyright reserved

2.2 A basic electrical circuit consists of FOUR main components in order to function correctly.

Give ONE example and ONE function of each of the components listed below. (Do NOT make a drawing.)

2.2.1 Power source

2.2.2 Conductors

2.2.3 Control device

2.2.4 Load

(4 × 2) (8)

2.3 The figure below represents a thermostat for a geyser or hot-water cylinder.

Name the components indicated in the diagram by writing only the answer next to the question number (2.3.1–2.3.5) in the ANSWER BOOK.

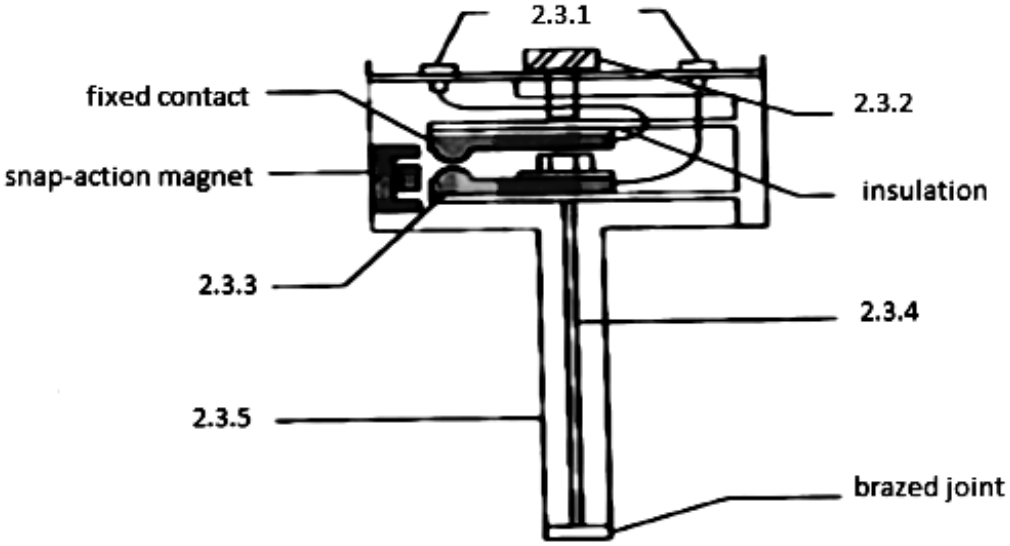

THERMOSTAT FOR A GEYSER OR HOT-WATER CYLINDER

(5 × 1) (5)

2.4 Modern lighting control has become very sophisticated due to the rapid development of energy-saving technology. The two main categories of lighting control are automatic and manual control.

Name the THREE subcategories of application of automatic control. (3)

[20]

QUESTION 3

3.1 Give the *symbol* and the *unit of measure* for the following terms used in illumination:

3.1.1 Luminance

3.1.2 Illuminance

(2 × 2) (4)

3.2 Lamps are grouped according to their principle of operation.

Name THREE main types of lamps. (3)

3.3 Draw a neat, fully labelled circuit diagram to show how a high-pressure mercury vapour lamp is connected to a single-phase supply. (6)

3.4 State FOUR advantages of tungsten halogen lamps when compared to other lighting sources. (4)

3.5 The stroboscopic effect occurs when discharge lighting is used near rotating machinery.

3.5.1 Briefly explain *stroboscopic effect*. (1)

3.5.2 The stroboscopic effect problem can be overcome by connecting twin-lamp fittings as a lead-lag circuit.

Explain how these twin-lamp fittings are connected to achieve a 90° phase difference between them. (2)

[20]

QUESTION 4

4.1 Explain the term *troubleshooting* when working on electrical equipment or appliances. (2)

4.2 After replacing the element in an electric kettle, there are two electrical tests that you should perform before connecting and switching the kettle on.

Name the TWO tests you will perform. (2)

4.3 State FIVE faults or problems that can occur on a washing machine. (5)

4.4 State THREE things you should NOT do to insure the safe, effective, operation of a microwave oven. (3)

4.5 Explain in FOUR steps the procedure to test the correct polarity in an appliance after you have disconnected the appliance from the power supply.

(4 × 2) (8)

[20]

Copyright reserved

QUESTION 5

5.1 The classification of electric motors is determined by the type of enclosure used when they are operational.

5.1.1 State TWO factors that determine the type of enclosure to be used.

5.1.2 State TWO functions of an electric motor enclosure.

5.1.3 Name TWO types of motor enclosures you are familiar with.

(3 × 2) (6)

5.2 Cleanliness is one of the factors to be considered when preparing to install electrical machines.

State FOUR different ways of cleaning an electric motor. (4)

5.3 Name FIVE types of single-phase AC induction motor. (5)

5.4 Name FIVE test instruments that you will use to perform Electrical testing on AC motors. (5)

[20]

TOTAL: 100

Copyright reserved