higher education & training

Department:
Higher Education and Training
REPUBLIC OF SOUTH AFRICA

MARKING GUIDELINE

NATIONAL CERTIFICATE (VOCATIONAL)

ELECTRICAL WORKMANSHIP
NQF LEVEL 3

7 December 2020

This marking guideline consists of 7 pages.

Copyright reserved

QUESTION 1

1.1
1.1.1 True
1.1.2 True
1.1.3 True
1.1.4 False
1.1.5 True

(5 × 1) (5)

1.2
1.2.1 C
1.2.2 D
1.2.3 B
1.2.4 C

(4 × 1) (4)

1.3
- The aims of the OHSA are to protect workers and other people entering the work area against hazards✓
- and establish supervisory councils.✓
- The objectives of the OHSA includes the aims as well as compensation and rehabilitation for workers injured at work or contracted occupational diseases✓

(3)

1.4
- High blood pressure
- Heart disease
- Emotional disorders (depression, anxiety, panic attacks)
- Diabetes
- Strokes
- Cancer

(Any 2 × 1) (2)

1.5 1.5.1
- Where was the injured employee?
- Which equipment was used?
- Were control and safety precautions used?
- What substances and materials were used?
- Were machine guards in good condition?
- Was equipment damaged?
- The position of machinery controls
- Appearance of surrounding area
- Weather conditions
- Noise levels
- Level of lighting

(Any 3 × 1) (3)

1.5.2
- Position of the witness at the time
- What was the witness doing at the time?
- What did the witness see or hear?
- The surrounding conditions, .i.e. weather, noise, fumes, lighting
- Condition of the accident scene
- What was the casualty doing at the time?
- Witness' opinion
- Prevention measures

(Any 3 × 1) (3)

Copyright reserved

1.6
- Will prevent costly mistakes
- Will improve efficiency
- Clear instructions of what to do
- Operational instructions near machinery
- Will know when work must be completed
- Goals are clearly defined
- Will provide direction
- Will minimise waste
- Standards are set to facilitate control
- Resources are identified and set aside to achieve goals (Any 2 × 1) (2)

1.7
- Complete reporting
- Be specific
- Give detailed descriptions
- Consider witness reports
- No vague or unsolicited comments (Any 3 × 1) (3)

[25]

QUESTION 2

2.1
- The magnetic effect
- The heating effect
- The chemical effect
- The electromagnetic effect (Any 3 × 1) (3)

2.2
2.2.1 Ohm or resistance meter / Buzzer
2.2.2 Oscilloscope or frequency meter
2.2.3 Insulation tester / Megger

(3 × 1) (3)

2.3
- Rough handling
- Excessive hot and dry conditions
- Dropping of instruments
- Not allowing certain instruments to heat up
- Not storing instruments in clean dry areas
- Not covering instruments in storage
- Not using supplied instrument boxes or enclosures
- Not selecting the correct switch and range positions
- Not checking the operation before use
- Applying more voltage or current than the rating
- Not discharging the circuit before testing it
- Using instruments around explosive gas vapour or in wet conditions
- Exposure to magnetic fields (Any 2 × 1) (2)

Copyright reserved

2.4

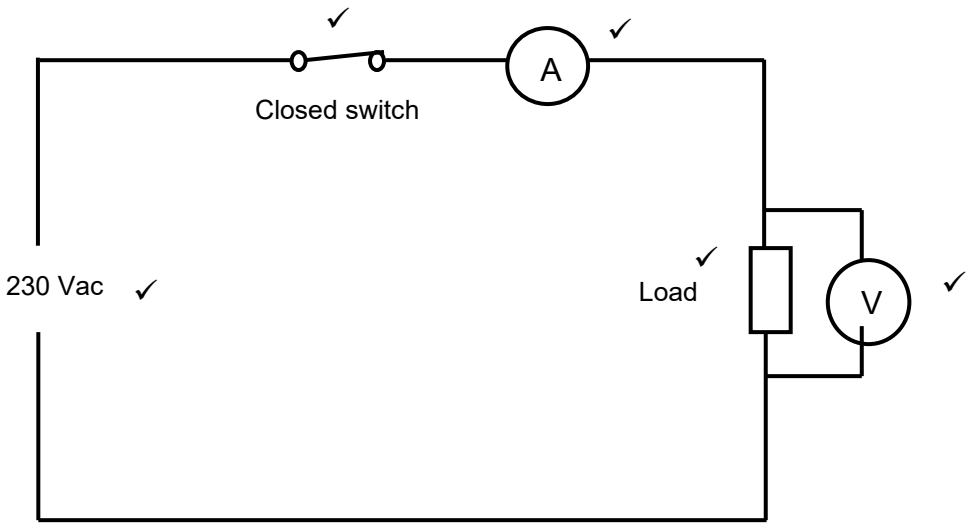

(Labelling) (5)
(Correct circuit) (2)
[15]

QUESTION 3

3.1
- When the kettle is switched on, the bimetal steam-sensing switch, which is mechanically connected to the on/off switch, closes.
- The element will heat up and the pilot light will switch on.
- The steam from the boiling water is channeled over the bimetal contact which bends, forcing the on/off switch off. (3)

3.2
- Automatic kettle
- Non-automatic kettle
- Cordless automatic kettle (3)

3.3
- Anode
- Cathode / filament
- Antenna (3)

3.4 3.4.1 Controls the water entering the washing machine

3.4.2 Gives a visual indication that the appliance circuit is on or activated

3.4.3 A separate set of stove plates excluding the oven, grill and warmer circuits

(3 × 1) (3)

3.5 All water heaters must be bonded,✓ i.e. all conductive parts✓ must be brought to the same potential earth.✓ (3)
[15]

QUESTION 4

4.1
- Quality assurance
- Diagnostic testing
- Periodic safety checks
- When doing maintenance
- When doing fault-finding (Any 2 × 1) (2)

4.2
- Continuity testing
- Polarity testing
- Earth testing
- Insulation resistance testing (4)

4.3
4.3.1 G
4.3.2 B
4.3.3 H
4.3.4 D
(4 × 1) (4)

4.4
- Carefully remove the brush holder with a small screwdriver.
- Visually check the condition and length of the brush.
- Make sure that the brush holder is clean.
- Make sure that the brushes move freely in the holder.
- Replace the brushes if worn.
- Replace the brushes using the reverse procedure. (Any 5 × 1) (5)

[15]

QUESTION 5

5.1
- Metal bases
- Foundation studs
- Slide rails (Any 2 × 1) (2)

5.2

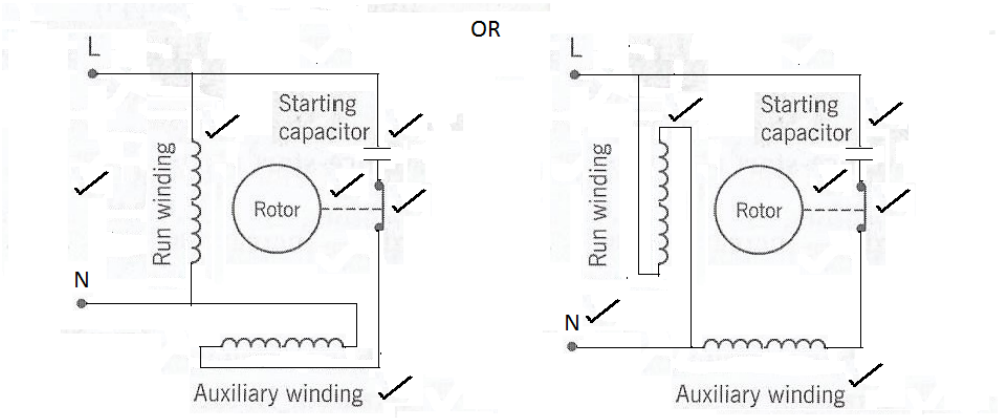

(ONE mark per correctly labelled and connected component)
(Any other correct component symbols may be used) (6 × 1) (6)

5.3
- Direct coupling
- Gear coupling
- Belt and pulley coupling (Any 2 × 1) (2)

5.4
- It prolongs the lifespan of motors by preventing them from working when overloaded
- It ensures operating continuity by preventing motors from stopping abruptly
- It enables a restart after tripping in a safe condition for people and equipment (Any 2 × 1) (2)

5.5
- Name plate data
- Cracks on lifting mechanisms
- Motor mountings
- Motor and load alignment
- All belts and terminals secure
- Guards secure
- Use of proper mounting holes
- Pulley and gears correctly fitted
- Pulleys and belts run true
- Belt's tension tight enough
- Motor runs freely when turned by hand
- Shaft bearing play
- Motor frame shield and base plates not cracked
- Missing belts and grease nipples
- Cracked fans (Any 3 × 1) (3)

[15]

QUESTION 6

6.1 It is the process of using heat from an arc✓ between an electrode and a workpiece for joining metals together.✓ (2)

6.2 6.2.1 They are insulated parts or holders that grip an electrode.✓

6.2.2 They carry the electric current from the power supply or arc welding machine to and from the workpiece. ✓ (2 × 1) (2)

6.3
- Type of metal
- Metal thickness
- Groove design
- Joint alignment
- Welding position
- Welder's skill
- Penetration depth
- Weld bead finish (Any 5 × 1) (5)

6.4
- Fumes and gases
- Electric shock
- Ultraviolet and heat radiation
- Noise
- Fire

(Any 4 × 1) (4)

6.5
- A spring-loaded earth clamp
- The earth cable
- A screw-type earth clamp

(Any 2 × 1) (2)
[15]

TOTAL: 100

Copyright reserved