higher education & training

Department:
Higher Education and Training
REPUBLIC OF SOUTH AFRICA

MARKING GUIDELINE

NATIONAL CERTIFICATE (VOCATIONAL)

ELECTRICAL WORKMANSHIP
NQF LEVEL 3

XX February 2020

This marking guideline consists of 6 pages.

Copyright reserved

QUESTION 1

1.1
1.1.1 F
1.1.2 E
1.1.3 A
1.1.4 B
1.1.5 C

(5 × 1) (5)

1.2
- Electrocution when coming into contact with live circuits
- Cuts, bruises, crushing, amputation or death
- Entanglement in machine parts
- Burns from hot parts, materials or equipment
- Fires and explosions
- Chemical exposure to dangerous gases or liquids (Any 3 × 1) (3)

1.3
- Which hazards are serious?
- Were any employees injured?
- Have there been any near misses?
- How serious could the potential injury be? (Any 2 × 1) (2)

1.4
- Work overload
- Sexual harassment
- Job insecurity
- Shift work
- Workplace violence
- No job control
- Lack of input (Any 4 × 1) (4)

1.5
- Position of injured employee
- Equipment used
- Control and safety precautions
- Condition of machine guards
- Position of machinery controls
- Damaged equipment
- General appearance of surroundings
- Weather conditions
- Noise levels (Any 3 × 1) (3)

1.6
- Rights and responsibilities
- Hazards in the workplace
- Legislation
- Potential for injuries and illness in the workplace (4)

1.7
- Provides direction
- Minimises waste
- Sets the standard to facilitate control
- Determines which tasks must be done to achieve goals (4)

[25]

Copyright reserved

QUESTION 2

2.1
2.1.1 True
2.1.2 False
2.1.3 True
2.1.4 False
2.1.5 False

(5 × 1) (5)

2.2 Electricity✓ supplied to the customer✓ (2)

2.3

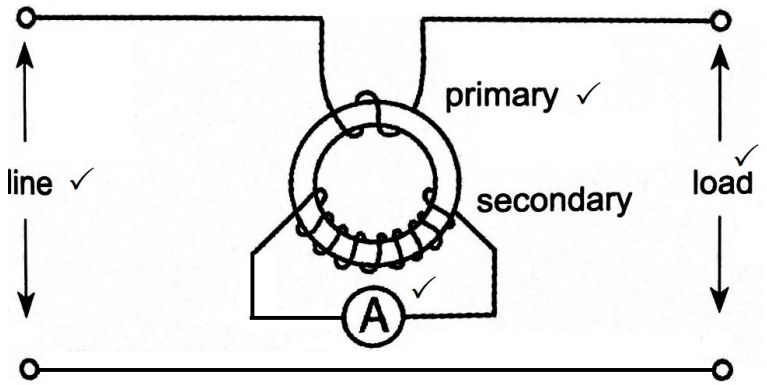

(4)

2.4 $\frac{Np}{Ns} = \frac{Is}{Ip}$

$Ip = \frac{Ns \times Is}{Np}$✓

$Is = \frac{5 \times 120}{4}$✓

$Is = \frac{600}{4}$✓

$Is = 150\ A$✓ (4)

[15]

QUESTION 3

3.1
- Wash timer
- Wash selector
- Cycle selector
- Spin-dry timer
- Water intake (5)

3.2
3.2.1 C
3.2.2 B
3.2.3 A
3.2.4 D
(4 × 1) (4)

3.3
- Element
- Thermal on/off switch
- Pilot light (3)

3.4
- Three-heat stove switch
- Five-heat stove switch
- Six-heat stove switch
- Simmerstat stove switch (Any 3 × 1) (3)

[15]

QUESTION 4

4.1
4.1.1 Tapered roller bearing (1)
4.1.2 Needle roller bearing (1)

4.2
- Continuity testing between the plug top and the kettle-base unit
- Visual inspection of the kettle-base unit for pitted or burnt connector contacts (2)

4.3
- Use a small screwdriver to remove the brush holder. Be careful because the brush is spring loaded and may shoot out.
- With the brush exposed, perform a visual inspection of its condition and length. Replace the brush if it is out of specification.
- Sometimes the brush holder becomes sticky because of accumulated dust and other materials – this will cause intermittent faults and poor commutation.
- Clean the brush holder with a cotton bud. (4 × 2) (8)

4.4
4.4.1 Angle grinder (1)
4.4.2 Orbital sander (1)
4.4.3 Gearbox (1)

[15]

Copyright reserved

QUESTION 5

5.1
- Slide rails
- Foundation studs
- Metal bases (3)

5.2

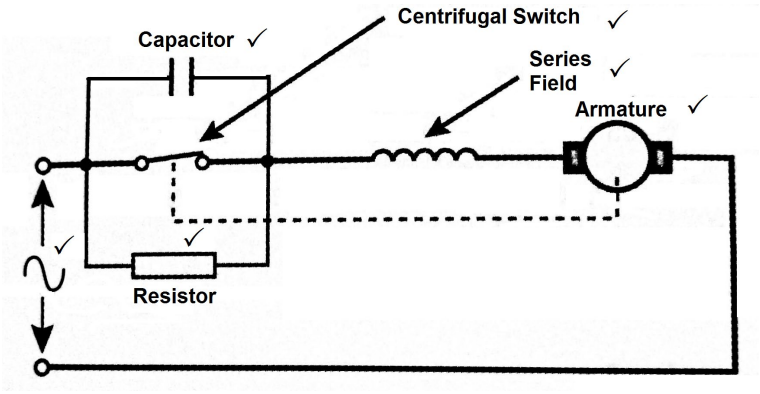

(6)

5.3

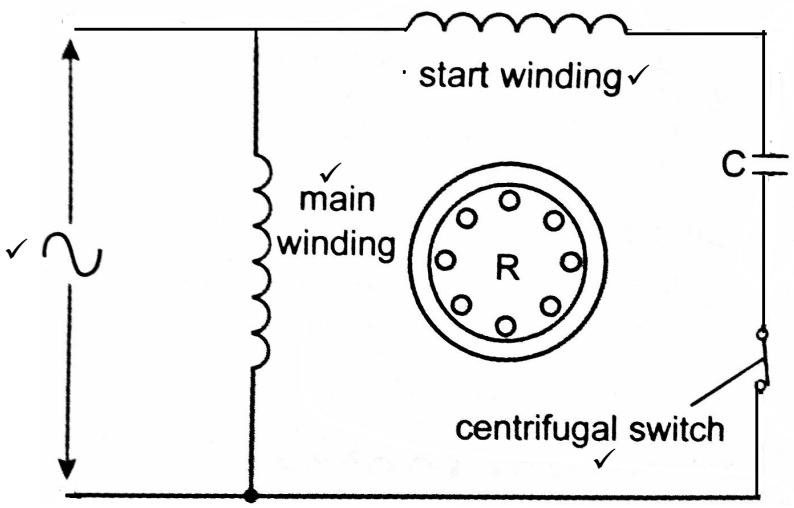

(4)

5.4
- DOL or direct-on-line
- Forward and/or reverse (2)

[15]

QUESTION 6

6.1
- Diameter of the electrode
- Amperage needed
- Diameter of the cables used
- Welder preference for jaw or twist-lock type (Any 3 × 1) (3)

6.2
- AC
- DC (2)

6.3
- Primary voltage shock
- Secondary voltage shock (2)

6.4
- Head protection: hard hat
- Face and eye protection: welding helmet, autodarkening helmet, safety goggles, clear face shield
- Ear protection: ear muffs or ear plugs
- Respirator: dust mask or half-mask respirator
- Hand protection: leather gloves or gauntlets
- Footwear: safety boots or spats
- Protective clothing: overall, leather welding jacket or leather apron
- Welding mats (Any 5 × 1) (5)

6.5
- Fumes and gasses
- Electric shock and electrocution
- Ultraviolet and heat radiation
- Noise
- Fire (Any 3 × 1) (3)

[15]

TOTAL: 100

Copyright reserved