higher education & training

Department:
Higher Education and Training
REPUBLIC OF SOUTH AFRICA

MARKING GUIDELINE

NATIONAL CERTIFICATE (VOCATIONAL)

ELECTRICAL SYSTEMS AND CONSTRUCTION
NQF LEVEL 3

7 December 2020

This marking guideline consists of 7 pages.

Copyright reserved

INSTRUCTIONS TO MARKERS

1. Mark all the questions.
2. Follow the answers according to the numbering system used in this question paper.
3. Use only a red pen.
4. Ticks and crosses must be neat and legible.

Copyright reserved

QUESTION 1

1.1 A person who undertakes to perform electrical installation work on behalf of any other person,✓ but excludes an employee of such first-mentioned person.✓ (2)

1.2
- 2,5 m vertically upwards.
- 1,25 m vertically downwards from the outer edge of the surface.
- 1,25 m horizontally outwards from the outer edges of the surface.
- 0,75 m horizontally inwards from the outer edge of the surface and underneath the surface. (4)

1.3 An antenna (including a satellite dish) shall be bonded to the installation earth system✓ by means of a conductor of at least 2,5 mm^2 copper or equivalent.✓ (2)

1.4
- Use the correct symbols.
- Use a suitable symbol orientation.
- Pay attention to the arrangement of symbols on the diagram.
- Pay attention to the routing of interconnections.
- Make sure your drawing is neat and precise. (Any 4 × 1) (4)

1.5
1.5.1 6 mm^2
1.5.2 20 A
1.5.3 2,5 mm^2
1.5.4 10 A
1.5.5 1 mm^2
(5 × 1) (5)

1.6
- A solid bend
- An inspection elbow
- An inspection tee
- A coupling
- A locknut
- Male bush
- Three-way round junction box
- A saddle (Any 4 × 1) (4)

1.7 A draw tape is used to draw in conductors✓ through PVC or metal conduit.✓ (2)

1.8 Permissible voltage drop is the loss in voltage✓ that is allowed between the point of supply and any point of outlet or terminals of fixed appliances.✓ (2)

[25]

QUESTION 2

2.1 To confirm the efficiency of an earthing system. (1)

2.2
- In case where the supplier does not provide an earthing terminal.
- Where an alternative supply is installed. (2)

2.3

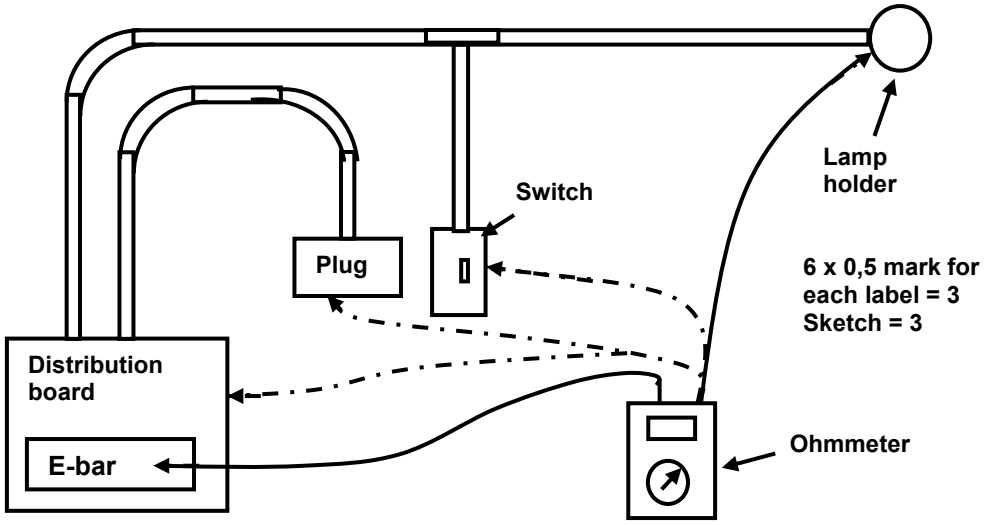

FIGURE 1 (6)

2.4
- An earth fault detection and disconnecting device may be installed✓ at the supply to the installation.✓
- The earth fault detection and disconnecting device should be able to operate at a current✓ related to the earth fault loop impedance.✓ (4)

2.5
2.5.1 Kilo-watt hour Meter/Energy meter
2.5.2 Circuit breaker
2.5.3 Earth connection
2.5.4 Supply cable
2.5.5 To distribution board

(5 × 1) (5)

2.6 2.6.1 Earth leakage and circuit breaker tester (1)

2.6.2
- Ensure that all appliances unplugged, and the stove and geyser are switched off.
- Plug the earth leakage circuit breaker tester into any socket outlet and then switch on the socket outlet.
- Turn the milliampere setting knob from 0 until the earth leakage trips. (3)

2.6.3 The earth leakage relay should trip 50–100% of its rated residual current. (1)

2.7 A certificate of compliance may be issued for the addition or alteration✓ only.✓ (2)

[25]

QUESTION 3

3.1
- The employer needs to create a safe working environment for employees.
- The employer needs to provide employees with personal protective equipment. (2)

3.2
- Voltage between phases
- Voltage between phases and earth
- Voltage across undischarged capacitors
- Voltage on disconnected neutral conductors
- Multiple supply sources
- Voltages between live exposed conductors, including metal structures, damp situations and other conductive surfaces.
- De-energised circuits becoming re-energised
- Induced voltages
- Installations or systems where unauthorized or undocumented modifications have been made.
- Deterioration of the insulation covering a conductor. (Any 4 × 1) (4)

3.3
- What tools and equipment will be needed?
- What materials need to be ordered?
- What documentation is required according to job instructions?
- Are there any requests to be submitted to the supply authority, for example, an application for electricity connection?
- What will happen in the case of unforeseen circumstances, such as heavy rain, unavailability of materials, etc. (Any 4 × 1) (4)

3.4
- Open circuit in live conductor
- Open circuit in neutral conductor
- Live or neutral conductor touching earth conductor
- Loose wiring at various terminals
- Open circuit in element
- Insulation failure in element
- Damaged thermostat
- Damaged isolator
- Damaged circuit breaker (Any 3 × 1) (3)

3.4
- Continuity test
- Insulation resistance test (2)

[15]

QUESTION 4

4.1
4.1.1 False
4.1.2 False
4.1.3 True
4.1.4 True
4.1.5 True
4.1.6 False
4.1.7 False
4.1.8 True
4.1.9 True
4.1.10 False

(10 × 1) **[10]**

QUESTION 5

5.1

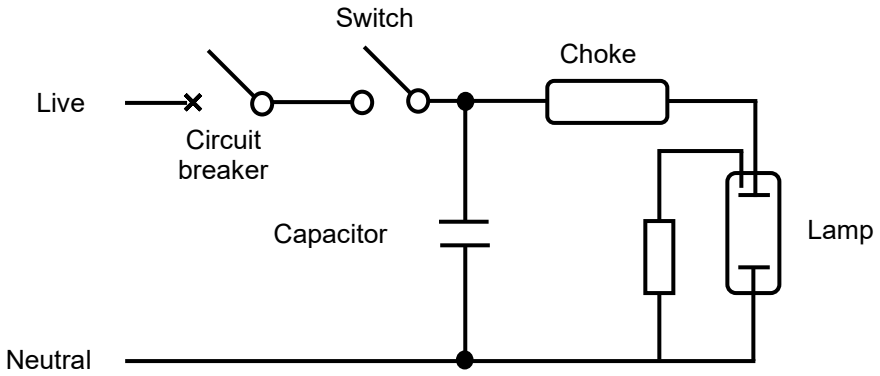

Sketch=3✓✓✓
Any label=3✓✓✓

FIGURE 2

(Any 6 × 1) (6)

5.2
- Check for loose connections
- Check for hot connections
- Check for damaged conductor insulation
- Conduct a continuity test on conductors
- Conduct a voltage test for each line in the system. (Any 3 × 1) (3)

5.3
- Increases losses in power distribution systems and results in increased energy costs.
- Larger cables and switchgear are necessary to supply a given load.
- Larger currents give rise to greater copper losses in transmission lines and transformers.
- Larger currents give rise to greater voltage drops in cables.
- Larger cables may be required on the consumer's side of the electrical installation to carry the larger currents demanded by a load operating at low power factor.
- Larger cables required lead to higher installation costs. (Any 2 × 1) (2)

5.4 Regulation 6.14.2.1: Surface mounted luminaires shall be selected and installed✓ such that thermal damage to the mounting surface is avoided.✓ (2)

5.5
- It initially completes the circuit for pre-heating the electrodes.
- It opens the circuit to provide a voltage kick for ignition. (2)

[15]

QUESTION 6

6.1
6.1.1 D
6.1.2 E
6.1.3 B
6.1.4 A
6.1.5 C

(5 × 1) (5)

6.2 It converts the variable direct current (DC) output of a photovoltaic solar panel✓ into alternating current (AC)✓ (that can be fed into a domestic or commercial load). (2)

6.3
- Conduction
- Convection
- Radiation
- Reflection (Any 3 × 1) (3)

[10]

TOTAL: 100

Copyright reserved