higher education & training

Department:
Higher Education and Training
REPUBLIC OF SOUTH AFRICA

MARKING GUIDELINE

NATIONAL CERTIFICATE (VOCATIONAL)

ELECTRICAL SYSTEMS AND CONSTRUCTION
NQF LEVEL 3

XX February 2020

This marking guideline consists of 7 pages.

Copyright reserved

QUESTION 1

1.1
- User
- Lessor
- Lessee (Any 2 × 1) (2)

1.2 1.2.1 70 °C
1.2.2 90 °C
(2 × 1) (2)

1.3 This is a rating system that defines the degree✓ to which electrical enclosures provide protection✓ against dust, water and physical impact.✓ (3)

1.4

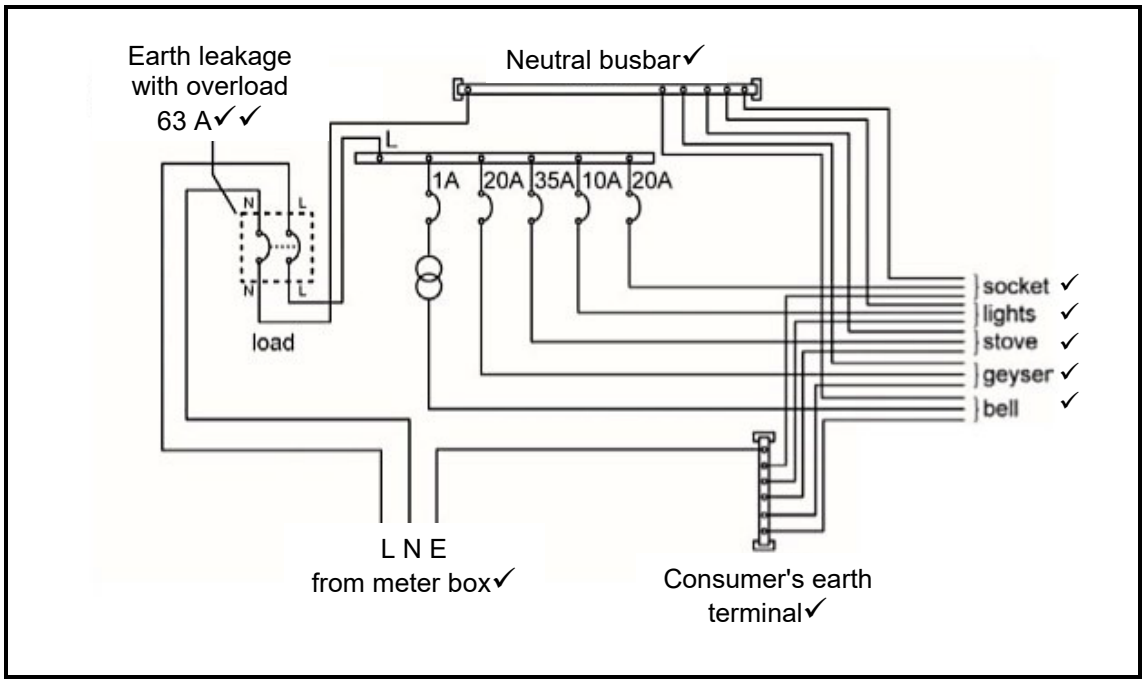

(10)

1.5
- Protection from cable damage
- Protection from excessive heat
- Protection from excessive moisture
- Protection in hazardous locations
- Minimum interference with machinery removal
- Spare wireway for future expansion (Any 3 × 1) (3)

1.6
- Good mechanical protection
- Longer lasting than PVC conduit
- Extended easily (3)

1.7
- Surfix cables are available in either round or flat construction.
- Round surfix cables have an aluminium polyethylene laminate that serves as an armouring.
- Surfix cables have a bare or tinned earth conductor.
- Cables are available in two, three and four core. (Any 2 × 1) (2)

[25]

QUESTION 2

2.1 Kilowatt-hour meter (1)

2.2 Termination of an electrical installation which has been provided for connecting any electrical machinery without the use of a tool – provided that no connection to a busbar is deemed to be a point of outlet (2)

2.3
- Multimeter
- Earth-resistance tester
- Insulation tester
- Earth-leakage circuit-breaker tester or polarity tester
- Earth-loop tester
- Clamp meter or tong tester
- Bell tester (Any 4 × 1) (4)

2.4
- Continuity of bonding
- Resistance of earth continuity conductor
- Continuity of ring circuits (if applicable)
- Earth fault-loop impedance at main switch
- Prospective short-circuit current
- Elevated voltage between incoming neutral and external earth (ground)
- Earth resistance at electrodes (if required)
- Insulation resistance
- Voltage at main distribution board with no load
- Voltage at main distribution board with load
- Voltage at available load (worst condition)
- Operation of earth-leakage unit and test button
- Polarity at points of consumption
- All switching devices in make-and-break circuits (Any 6 × 1) (6)

2.5
- It must have a breaking capability of at least 2,5 kA.
- It must have overload protection and be rated at 63 A.
- It must disconnect both live and neutral conductors.
- It must have a rated residual current of 30 mA. (Any 2 × 1) (2)

2.6
- Ensure that all appliances are unplugged and that the stove and geyser is switched off.
- Insert the earth-leakage circuit-breaker tester into the socket outlet and then switch on the socket outlet.
- Turn the milli-ampere setting knob gradually from 0 to 30 mA.
- The device should trip between 50–100% of its rated residual current. (4)

Copyright reserved

2.7

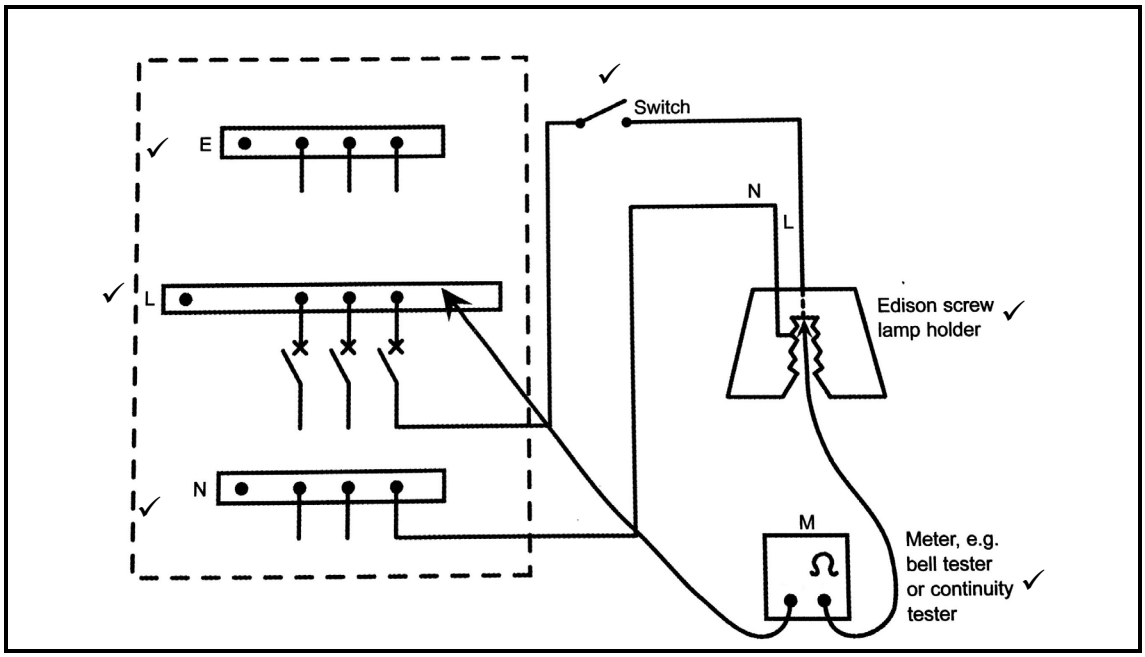

(6)
[25]

QUESTION 3

3.1 It occurs when working on large electrical installations with standby power systems such as a generator. (2)

3.2 It is a type of switch that is used for the purpose of 'breaking' the power circuit when a cover or lid is removed from the equipment enclosure.

OR

It is a switch that must be closed first before the actual switch can be switched on. (2)

3.3

3.3.1	True
3.3.2	True
3.3.3	False
3.3.4	False
3.3.5	True
3.3.6	False
3.3.7	True
3.3.8	True
3.3.9	True
3.3.10	False

(10 × 1) (10)

3.4 Half-split method (1)
[15]

QUESTION 4

4.1
- Person who the permit is addressed to
- Person present throughout the course of work
- Exact equipment isolated and its exact location
- Earthing connections
- Where warning notices are posted
- Points of isolation and lockouts
- Nature of work to be carried out
- Further precautions to be taken during the course of work
- Presence of any other source of hazards (Any 2 × 1) (2)

4.2 In a TN-C-S earthing system the protective earth and neutral conductor are combined in a single conductor✓ between the source of energy and the point of supply✓ and separated in the consumer's installation.✓ (3)

4.3
- Provides a return conductive path for any earth-fault current and earth-leakage current
- Maintains the neutral of the LV system as close as possible to earth potential
- Ensures that MV protection operates in the event of a fault between the MV and LV windings of a transformer
- Reduces the prospective touch voltage as much as is reasonably practical (Any 2 × 1) (2)

4.4
- The completed work is tested or checked against the work schedule.
- The worksite is cleaned up and secured.
- Tools, equipment and materials are cleaned, checked and returned to storage.
- Relevant work permits are signed off and the low-voltage overhead services and associated equipment are returned to service.
- All documentation is finalised, processed and the appropriate personnel is notified.
- All workers are informed that the apparatus will be returned to service.
- All earthing gear is removed from the apparatus or circuit.
- The appropriate isolators are opened or closed and fuse or neutral links replaced where applicable and its status verified.
- Safety labels and warning signs are removed and cubical doors are locked. (Any 3 × 1) (3)

[10]

QUESTION 5

5.1 Halogen lamps (1)

5.2
- The input to the transformer✓ must be connected via a circuit breaker.✓
- Cables or conductors must be able to carry the current✓ that will be drawn by the lamp system.✓
- Ensure that lamps do not start a fire✓ as it normally gets very hot.✓

(Any 2 × 1) (2)

5.3
5.3.1 Starter
5.3.2 Fluorescent tube
5.3.3 Choke
5.3.4 Power factor correction capacitor
5.3.5 AC supply

(5 × 1) (5)

5.4
- Voltage test
- Earth continuity test
- Continuity of conductors
- Insulation resistance between conductors
- Insulation resistance between conductors and earth
- Testing capacitors
- Load current (Any 5 × 1) (5)

5.5 Power factor is the ratio of true power to apparent power and is a value between 0 and 1. (2)

[15]

QUESTION 6

6.1
- Load-cell material
- Resistance
- Sunlight intensity
- Cell temperature
- Shading (Any 2 × 1) (2)

6.2

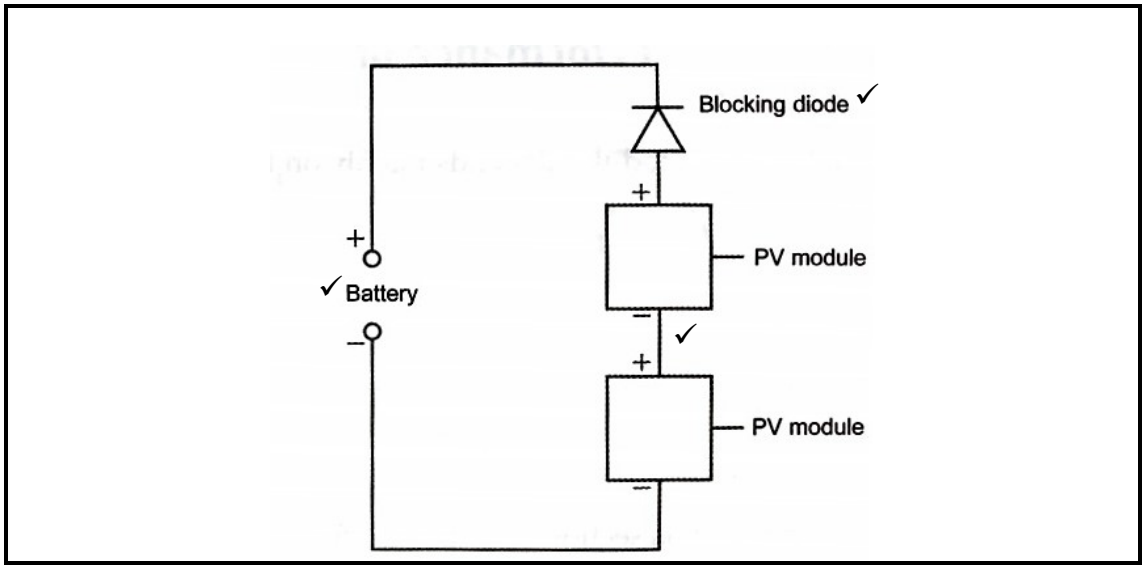

(3)

6.3
- Collector
- Storage tank
- Electric pump
- Mounting stand
- Piping (5)

[10]

TOTAL: 100

Copyright reserved