higher education & training

Department:
Higher Education and Training
REPUBLIC OF SOUTH AFRICA

MARKING GUIDELINE

NATIONAL CERTIFICATE (VOCATIONAL)

CONSTRUCTION PLANNING
NQF LEVEL 3

8 December 2020

This marking guideline consists of 9 pages.

Copyright reserved

QUESTION 1

1.1 1.1.1 C
1.1.2 D
1.1.3 G
1.1.4 B
1.1.5 A
1.1.6 E

(6 × 1) (6)

1.2 1.2.1
- External barriers✓ are caused by factors outside the control of the sender and the receiver.✓
- The environmental and natural conditions that act as a barrier in communication✓ when a message is sent from a sender to a receiver.✓ (Any 1 × 2) (2)

1.2.2
- Emotional barriers✓ are caused when feelings get in the way of the message.✓
- Mental walls✓ that keep a person from openly communicating his/her thoughts and feelings to others.✓ (Any 1 × 2) (2)

[10]

QUESTION 2

2.1

QUESTION 2.1: RUBRIC			
PART OF DRAWING	**MARKING CRITERIA**	**POSSIBLE MARK**	**TOTAL ACHIEVED**
Foundation, floor slab and floor screed	Correct position	3	
Wall and plaster	Correct position	2	
Ground level, earth fill	Correct position	2	
Damp proof course and wall tie	Correct position	2	
Scale		2	
	TOTAL	**11**	

Copyright reserved

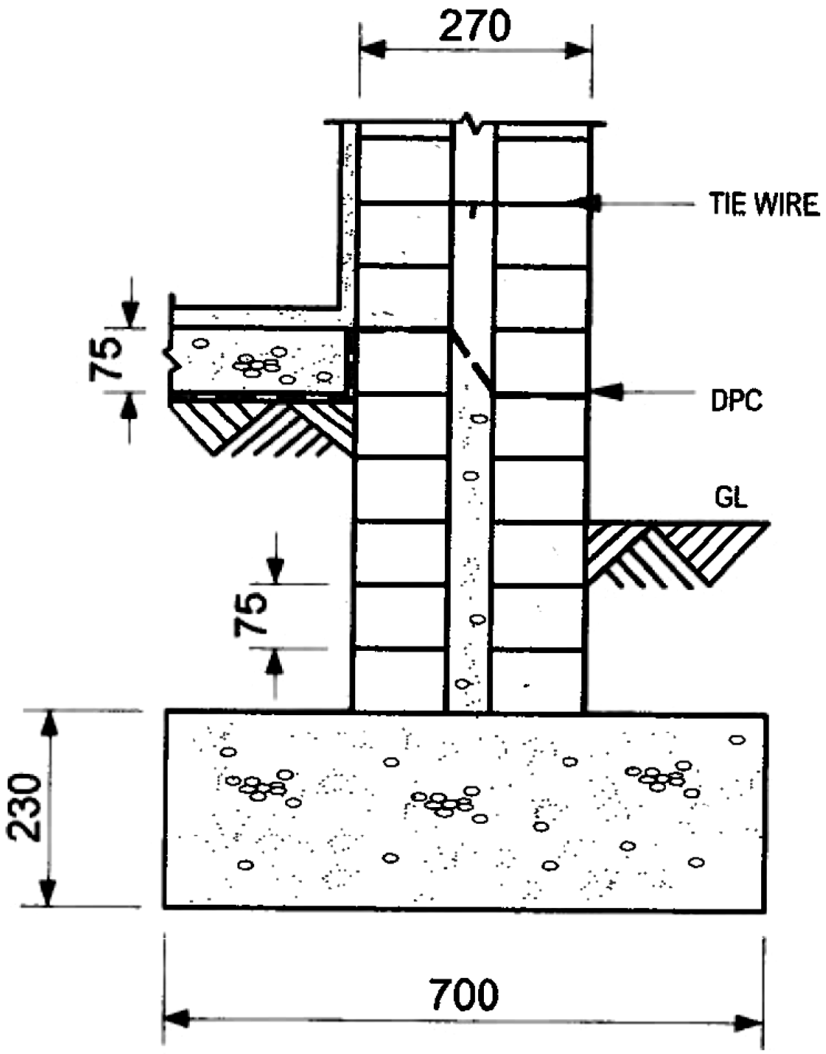

VERTICAL CROSS SECTION OF A 270 mm CAVITY WALL CONCRETE STRIP FOUNDATION
SCALE 1:10 (11)

2.2

QUESTION 2.2: RUBRIC			
PART OF DRAWING	**MARKING CRITERIA**	**POSSIBLE MARK**	**TOTAL ACHIEVED**
Drawing	Correct	3	
	Scale	2	
	Line work	2	
	TOTAL	**7**	

(7)

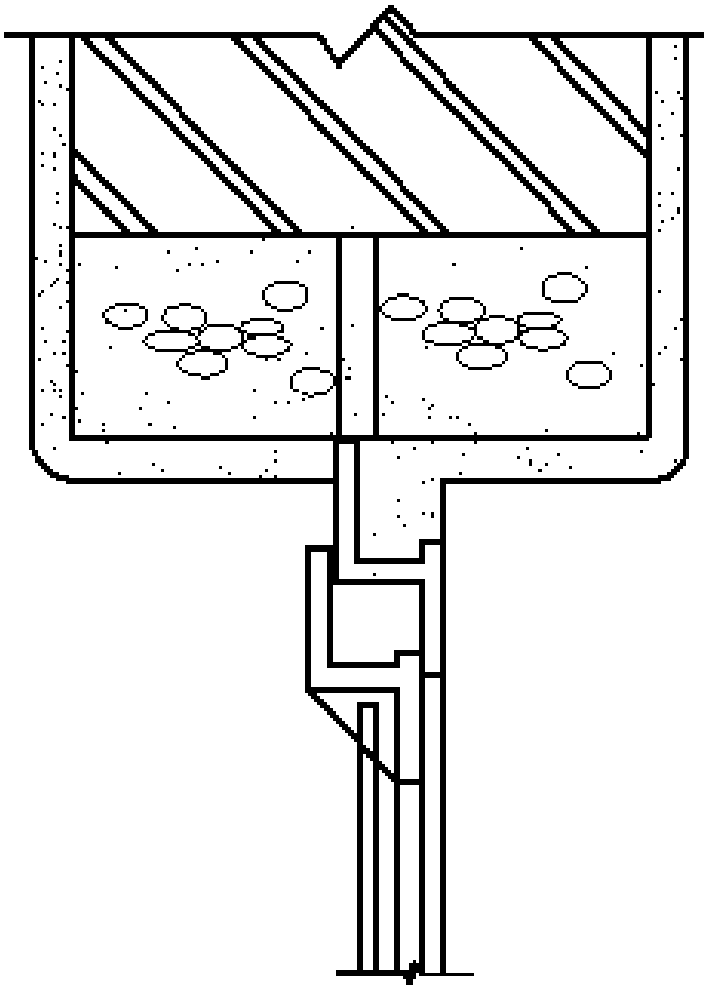

2.3

QUESTION 2.3: RUBRIC			
PART OF DRAWING	**MARKING CRITERIA**	**POSSIBLE MARK**	**TOTAL ACHIEVED**
Drawing	Correct Isometric	3	
Accuracy and neatness	Correct	3	
	Scale	2	
	Line work	2	
	TOTAL	**10**	

(10)

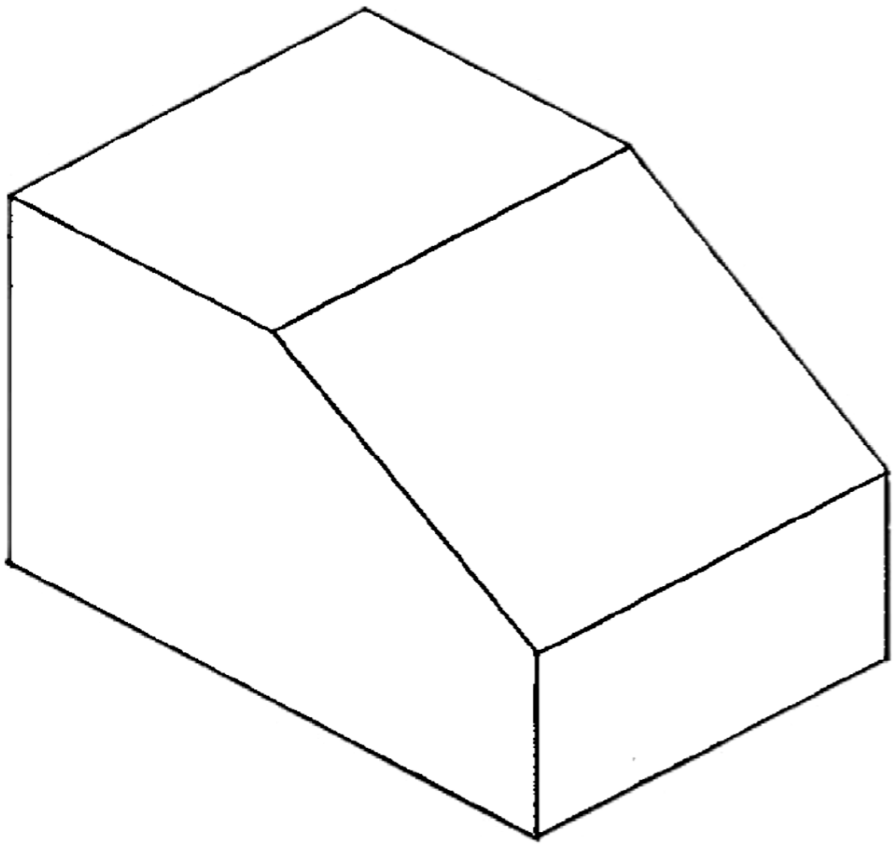

2.4 2.4.1 First-angle projection
2.4.2 Third-angle projection

(1 × 2) (2)
[30]

QUESTION 3

3.1 3.1.1 Master Builders Association (1)

- Advises on aspects of labour relations.
- Legal and contractual advice.
- Marketing opportunities through its publications.
- Opportunities to attend seminars and workshops.
- Maintains highest possible standards.
- Draws up and adapts building contracts.
- Represents its members in national bodies.
- Developed several useful model agreements for a variety of applications.
- Informs members of new occupational health and safety legislation.
- Improves members' occupational health and safety programmes and procedures.
- Assists members with incident investigations and reports.
- Expands construction markets, through credible and expert advocacy at all levels of government.
- Ensures that legislators and regulators understand the impacts of policies on building and construction businesses.
- Facilitates the involvement of its members in government affairs.
- Provides a powerful and respected voice in the policy making process. (Any 3 × 1) (3)

3.1.2 Construction Industry Development Board (1)

- Promotes partnerships between different stakeholders in the construction industry.
- Promotes improved performance of clients, contractors and other stakeholders.
- Sets up a register of contractors and construction projects to regulate and monitor performance.
- Encourages sustainable involvement of previously disadvantaged communities.
- Monitors and promotes the performance of the industry for sustainable growth, delivery and empowerment.
- Promotes improved delivery management capacity and the uniform application of procurement policy throughout all spheres of government.
- Promotes sustainable participation of the emerging sector.
- Provides strategic direction.
- Develops effective partnerships for growth, reform and improvement of the construction sector. (Any 3 × 1) (3)

Copyright reserved

3.1.3 South African Council for Quantity Surveying Professionals (1)

- Provides guidelines for quantity surveying fees.
- Provides a code of conduct for professionals.
- Identifies construction work that should be done by a registered quantity surveyor.
- Sets and monitors academic standards.
- Registers qualified quantity surveyors according to guidelines.
- Provides for the establishment of a juristic person to be known as the South African Council for the Quantity Surveying Profession.
- Provides for the registration of professionals, candidates and specified categories in the quantity surveying profession.
- Provides for the regulation of the relationship between the South African Council for the Quantity Surveying Profession and the Council for the Built Environment. (Any 3 × 1) (3)

3.2 3.2.1 Client (1)

3.2.2 The client has little or no knowledge✓ of construction. ✓ (2)

3.2.3 When the work is not in accordance with the design. (1)

3.2.4 At the local building authority. (1)

3.2.5 He/She coordinates his/her work with other stakeholders such as the quantity surveyors, structural engineers and other specialists. (1)

3.3 3.3.1

- Provides a place where clients can go to find people who sell clay bricks and burnt masonry.
- It makes people aware of the clay bricks and burnt masonry.
- It supports people who make and sell clay bricks and masonry.
- Makes sure that clay bricks and burnt masonry are made to the right standards.
- Promotes the use of clay bricks and burnt masonry. (Any 4 × 1) (4)

3.3.2

- The institute works towards enlarging the steel industry and increasing its monetary value.
- Aims to promote the use of steel in construction projects.
- Develops steel technology.
- Strives to provide clients with the best service possible.
- Aims to encourage qualified, skilled people to enter the industry.

(Any 4 × 1) (4)

3.3.3
- Improves the standard of timber products.
- Supports people in the construction industry so that they can do business more easily.
- Advertises the services of its members to attract more business for them.
- Trains and appoints inspectors to inspect the roof trusses. (4)

[30]

QUESTION 4

4.1 4.1.1
- A rational design is a design that needs to be approved.
- It must convince that the materials that would be used, are suitable for the kind of structure that would be built.

4.1.2
- The local authority is a group of people who are responsible for governing a town/municipality.
- It is an administrative body in local government that provides planning permission. (2 × 2) (4)

4.2 4.2.1 Cornerstone
4.2.2 Standardised
4.2.3 Regulates
4.2.4 Buildings
4.2.5 Designed
(5 × 1) (5)

4.3 The contractor must apply for permission for any permanent building work ✓ and plans must be drawn up, ✓ submitted and approved before permission is given. ✓ (3)

4.4 Certificate of non-compliance
A certificate of non-compliance means that the contractor cannot go ahead with the project✓ and must fix the problems with the structure within a given time.✓
Demolition order
A demolition order means that the structure the contractor has built does not comply with building regulation✓ and will have to be knocked down and restarted.✓ (2 × 2) (4)

4.5 4.5.1 Thomas Farynor. (1)

4.5.2 It was caused by a spark/smouldering ember from the oven in a bakery. (1)

4.5.3
- Most houses in London were made of wood.
- The roof was made of thatch.
- Houses were built close together. (4)

- The wind blew down the narrow streets.

4.5.4 Three days. (1)

4.5.5
- It is a set of 282 laws created in ancient Babylon around 2200 BC.
- It refers to a set of rules or laws enacted by the king of Babylon. (2)

4.5.6 Five laws. (1)

4.6
- Experience
- Contractor's price (financial offer) that is made.
- Contractors balance between the price and quality.
- Contractor's ability to complete the job within budget and on time.
- Contractor's registration with the CIDB.
- BEE status.
- Contractor's financial ability. (Any 4 × 1) (4)

[30]

TOTAL: 100