higher education & training

Department:
Higher Education and Training
REPUBLIC OF SOUTH AFRICA

NATIONAL CERTIFICATE (VOCATIONAL)

CONSTRUCTION PLANNING
NQF LEVEL 3

(12010253)

7 November 2018 (X-Paper)
09:00–13:00

REQUIREMENTS: A3 drawing sheet

Drawing instruments may be used.

This question paper consists of 5 pages and 2 diagram sheets.

Copyright reserved

TIME: 4 HOURS
MARKS: 150

INSTRUCTIONS AND INFORMATION

1. Answer ALL the questions.
2. Read ALL the questions carefully.
3. Number the answers according to the numbering system used in this question paper.
4. QUESTIONS 2.2 and 2.3 must be answered on the A3 DRAWING SHEET. ALL other answers must be done in the ANSWER BOOK.
5. Do drawings, sketches and diagrams in pencil.
6. Sketches and/or diagrams must be neat, reasonably large, in proportion and fully labelled.
7. Rule off across the page on completion of each question.
8. ALL abbreviations and symbols must comply with the latest National Building Regulations and ALL relevant SANS (SABS) codes.
9. Write neatly and legibly.

Copyright reserved

QUESTION 1: COMMUNICATION IN THE CONSTRUCTION INDUSTRY

1.1 Give ONE example of each of the following communication types:

1.1.1 Written communication

1.1.2 Nonverbal communication

1.1.3 Verbal or oral communication

1.1.4 Electronic communication

1.1.5 Pictures and drawings

1.1.6 Symbols

(6 × 1) (6)

1.2 Briefly explain each of the following communication barriers on a construction site:

1.2.1 Language barriers

1.2.2 Psychological barriers

(2 × 2) (4)

[10]

QUESTION 2: TECHNICAL DRAWINGS

2.1 The title block contains important information about the drawings that enable people working with the drawings to identify and interpret it correctly.

List FIVE pieces of relevant information that should be in the tittle block. (5)

2.2 FIGURE 1, DIAGRAM SHEET 1 (attached), shows the front, side and top views of a shaped figure drawn in first-angle orthographic projection.

Draw, to scale 1:10, an isometric view of the shaped figure. Do NOT copy the given views. (12)

2.3 FIGURE 2, DIAGRAM SHEET 2 (attached), shows a detailed view of a vertical section through a steel window frame.

Draw a neat freehand drawing using the given dimensions. Insert ALL labels. Use your discretion where dimensions are NOT given. (14)

[31]

Copyright reserved

QUESTION 3: THE SOUTH AFRICAN CONSTRUCTION INDUSTRY

3.1 Briefly indicate the responsibilities of each of the following stakeholders in the construction industry:

3.1.1 Quantity surveyor

3.1.2 Contractor

3.1.3 Clerk of works

3.1.4 Architect

3.1.5 Building inspector

(5 × 2) (10)

3.2 Choose an acronym from COLUMN B that matches a description in COLUMN A. Write only the letter (A–F) next to the question number (3.2.1–3.2.5) in the ANSWER BOOK.

COLUMN A		COLUMN B	
3.2.1	Aims to maintain a high standard of education at tertiary level by awarding professional certificates	A	ECSA
3.2.2	Trade association for employers in the building industry	B	SACQSP
3.2.3	Created by members of the industry to assist others by offering training and advice on appropriate legislation	C	SAFCEC
3.2.4	Partners with parliament and the engineering profession to encourage a high level of education and training in all engineering professions	D	SACAP
3.2.5	Gives advice on contractual arrangements and prepares contract documents	E	CIDB
		F	MBA

(5 × 1) (5)

3.3 Name FIVE types of trade organisations. (5)

3.4 State TWO functions of each trade organisation mentioned in QUESTION 3.3.

(2 × 5) (10)

[30]

Copyright reserved

QUESTION 4: CONSTRUCTION LEGISLATION AND REGULATION

4.1 FIVE of the 282 laws in the Code of Hammurabi address the subject of construction and are aimed specifically at deterring failures in buildings.

Explain each of the following building regulations/laws in the Code of Hammurabi:

4.1.1 230

4.1.2 233

(2 × 2) (4)

4.2 Explain the historical background of the Great Fire of London. (5)

4.3 Name THREE ways in which a contractor can comply with the National Building Regulations. (3 × 2) (6)

4.4 Define a *competent person* in terms of the Housing Consumers Protection Measures Act 95 of 1998. (2)

4.5 State THREE requirements of the local authority according to the National Building Regulations (SANS 10400). (3 × 2) (6)

4.6 Complete the following paragraph about the contradiction between drawing specifications and prescribed national standards or bylaws by writing down the missing word or words next to the question number (4.6.1–4.6.6) in the ANSWER BOOK.

If there is a (4.6.1) … between a specification on the drawings and the prescribed national standards or (4.6.2) …, the (4.6.3) … should be followed because it is easy to (4.6.4) … and, if it has been (4.6.5) …, should in any case be complaint with the (4.6.6) … (6 × 1) (6)

[29]

TOTAL: 100

Copyright reserved

DIAGRAM SHEET 1

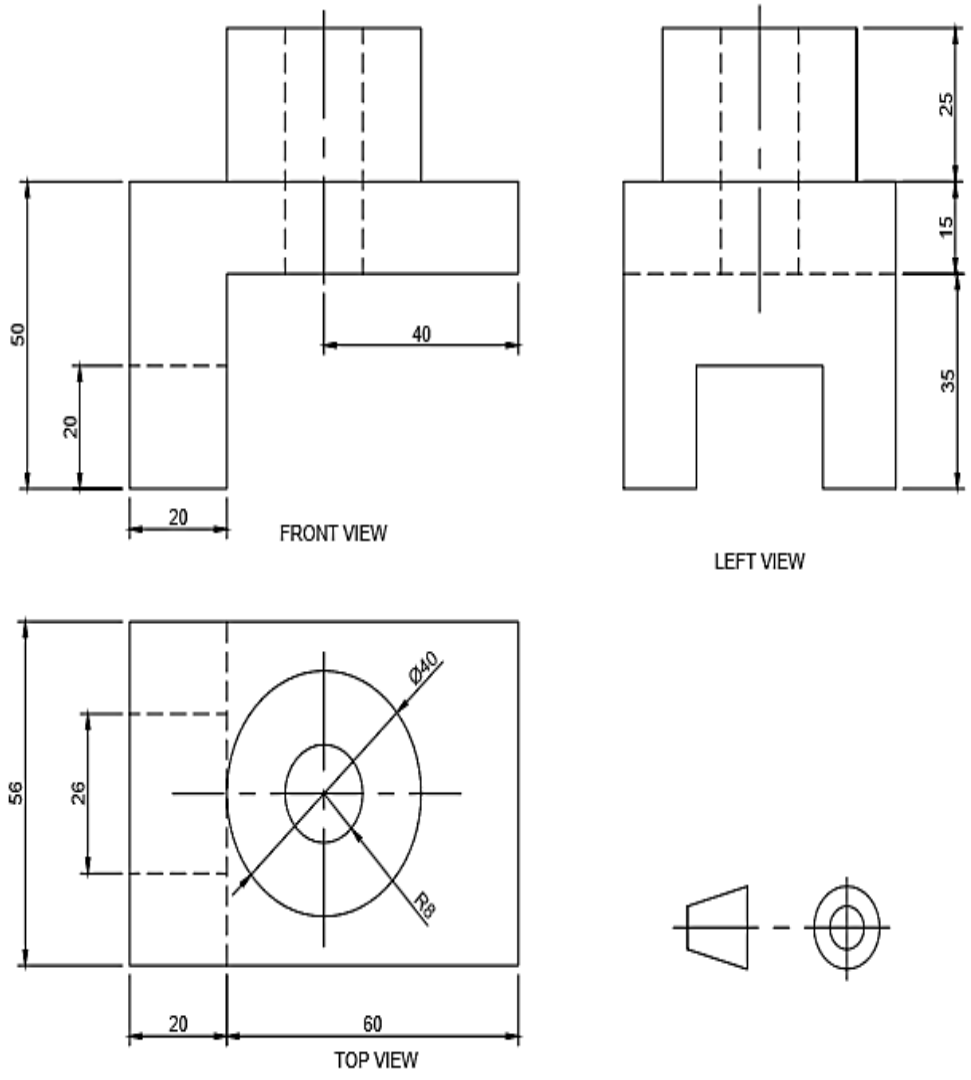

FIGURE 1

DIAGRAM SHEET 2

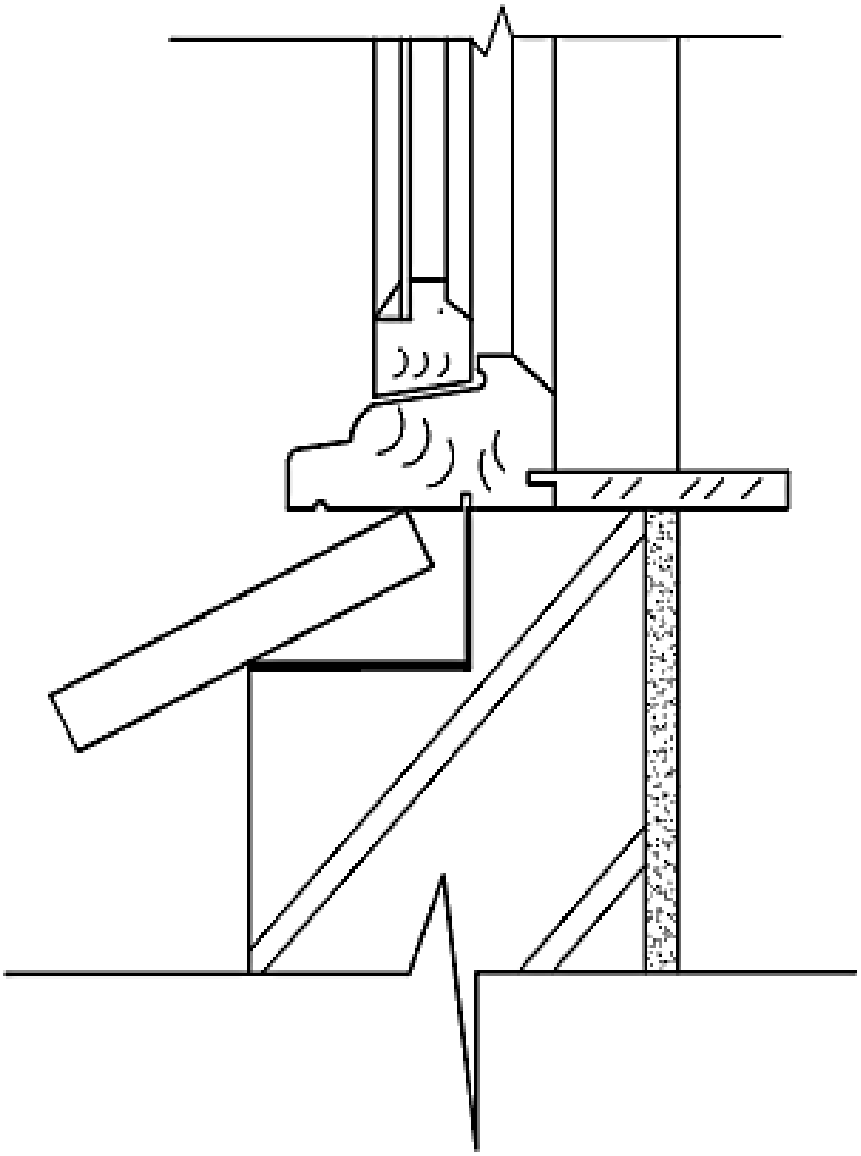

FIGURE 2

Copyright reserved