higher education & training

Department:
Higher Education and Training
REPUBLIC OF SOUTH AFRICA

NATIONAL CERTIFICATE (VOCATIONAL)

CONSTRUCTION PLANNING
NQF LEVEL 3

(12010253)

26 February 2020 (X-paper)
09:00–13:00

REQUIREMENTS: A4 drawing sheets

This question paper consists of 5 pages and 1 diagram sheet.

045Q1S2026

Copyright reserved

TIME: 4 HOURS
MARKS: 100

INSTRUCTIONS AND INFORMATION

1. Answer all the questions.
2. Read all the questions carefully.
3. Number the answers according to the numbering system used in this question paper.
4. The drawings, sketches and diagrams must be done in pencil and must be neat, reasonably large, in proportion and fully labelled.
5. Rule off across the page after each question.
6. All the abbreviations and symbols must comply with the latest National Building Regulations and all relevant SANS (SABS) codes.
7. QUESTIONS 2.2 and 2.3 must be answered on drawing sheets.
8. Start each section on a new page.
9. Use only a blue or black pen.
10. Work neatly.

Copyright reserved

QUESTION 1

1.1 Site meetings can be used as a way of monitoring progress of work on a construction site.

Name SIX factors that should be considered when planning a site meeting. (6)

1.2 In the construction industry words are used for specific techniques which, if not well understood, may lead to miscommunication resulting in project delays.

Briefly explain the meaning of the following forms of language barriers:

1.2.1 Jargon

1.2.2 Paraphrase

(2 × 2) (4)
[10]

QUESTION 2

2.1 Name THREE advantages of freehand drawings. (3)

2.2 Draw, approximately to scale 1:10, a cross section of the bottom 8 courses of a 270-mm cavity wall to according to prescribed national standards. Show the following details:

- Concrete strip foundation 600 mm × 200 mm
- Concrete floor slab 75 mm
- Screed 20 mm
- Hardcore
- Plaster internal 15 mm
- Ground level two courses above the foundation
- Top of floor slab five courses above foundation
- Damp-proofing to wall and floor
- Wall tie
- Concrete to cavity
- Hatching to foundation, floor slab and hard core (15)

2.3 The attached DIAGRAM SHEET shows the front and top view of a cylindrical pipe cut at a radius of 25.

Draw, to scale 1:2, the front view, top view and the development of the pipe. Use an appropriate construction method and clearly show the construction lines and the curve in the development. Print the title and scale below the finished drawing. (12)
[30]

QUESTION 3

3.1 Explain the responsibilities of the following stakeholders in the construction industry:

3.1.1 Mortgage lender

3.1.2 Clerk of works

3.1.3 Quantity surveyor

3.1.4 Client

3.1.5 Architect

(5 × 2) (10)

3.2 Indicate whether the following statements are TRUE or FALSE by writing only 'True' or 'False' next to the question number (3.2.1–3.2.7) in the ANSWER BOOK.

3.2.1 The role of the South African Federation for Civil Engineering Contractors is to promote the engineering profession in South Africa.

3.2.2 The Concrete Manufactures Association is a regulatory body.

3.2.3 MBA stands for Masters Brick Association.

3.2.4 IOPSA promotes the use of the highest quality plumbing products and workmanship.

3.2.5 Trade organisations aim to help organisations to do more business.

3.2.6 The Southern African Institute of Steel Construction aims to develop steel technology and promotes the use of steel.

3.2.7 The function of the Institute for Timber Construction is to make people aware of the clay brick and burnt masonry industry.

(7 × 1) (7)

3.3 Regulatory bodies are professional organisations monitoring the functioning of different stakeholders in the construction industry.

Identify the role if of the following regulatory bodies in South Africa:

3.3.1 Engineering Council of South Africa

3.3.2 Construction Industry Development Board

3.3.3 South African Council for the Architectural Profession

(3 × 3) (9)

3.4 Name TWO functions of the regulatory body SACQSP. (2 × 2) (4)

[30]

QUESTION 4

4.1 A local authority has the power to issue a certificate of noncompliance or a demolition order.

State the requirements of the local authority that must be included in an application for approval to erect a building. (4)

4.2 The South African National Building Regulations are accompanied by a set of deemed-to-satisfy rules which are specific instructions telling the designer in detail what is required on the parts of the building project.

Describe the following regulations based on the Scandinavian structure:

4.2.1 Objectives

4.2.2 Functional requirements

4.2.3 Performance requirements

4.2.4 Verification methods

(4 × 2) (8)

4.3 Name THREE South African Building Regulations with specific reference to 1962–2008. (3)

4.4 Define *competent person* in terms of the Housing Consumers Protection Measures Act, No. 95 of 1998. (6)

4.5 Complete the paragraph on the Code of Hammurabi by using the words in the list below. Write only the answer next to the question number (4.5.1–4.5.9) in the ANSWER BOOK.

authority; address; prologue; collection; buildings; construction; Babylon; five; failures

The Code of Hammurabi is a (4.5.1) … of 282 laws, each only a sentence or two in length and was created in ancient (4.5.2) … around 2200 BC. The Code begins with a (4.5.3) … where Hammurabi introduces himself and ends with a statement where he affirms his (4.5.4) … and sets forth his hopes and prayers for his code of laws. (4.5.5) … of the 282 laws in the Code of Hammurabi (4.5.6) … the subject of (4.5.7) … and are aimed at deterring (4.5.8) … in (4.5.9) … (9)

[30]

TOTAL: 100

Copyright reserved

(12010253)

CONSTRUCTION PLANNING L3

DIAGRAM SHEET

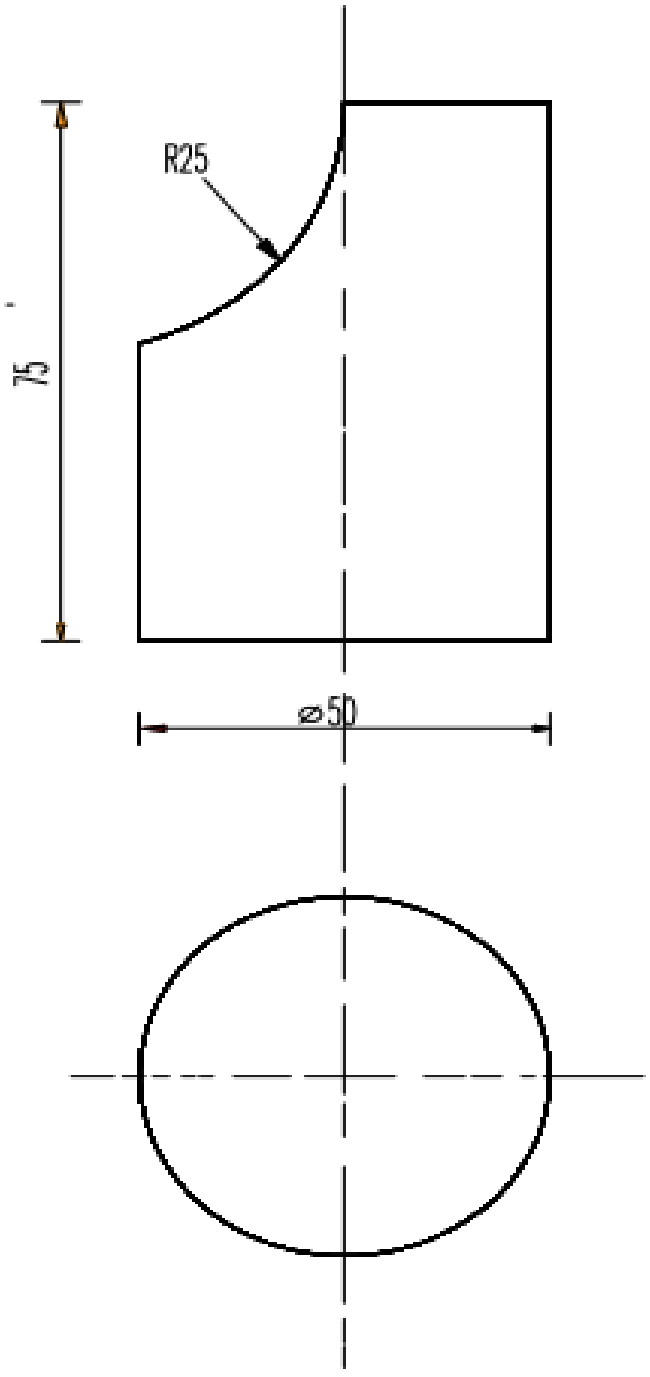

FRONT AND TOP VIEW OF CYLINDRICAL PIPE

Copyright reserved