higher education & training

Department:
Higher Education and Training
REPUBLIC OF SOUTH AFRICA

MARKING GUIDELINE

NATIONAL CERTIFICATE (VOCATIONAL)

CONSTRUCTION PLANNING
NQF LEVEL 3

XX February 2020

This marking guideline consists of 6 pages.

Copyright reserved

QUESTION 1

1.1
- How often the site meeting will be held
- Where the meetings will be held
- Who will attend the meetings
- Who will take the minutes
- Person responsible for follow-up
- Agenda items (6)

1.2 1.2.1 Words used by a particular profession✓ which are difficult for others to understand✓

1.2.2 Expresses the meaning of different words✓ for the purpose of clarification✓

(2 × 2) (4)
[10]

QUESTION 2

2.1
- Communicate the detail of the parts clearly
- Quick to produce
- Can be done any place, any time
- Perspective can be added
- Volume and depth can be shown
- Self-explanatory
- Drawn to larger scale (Any 3 × 1) (3)

2.2

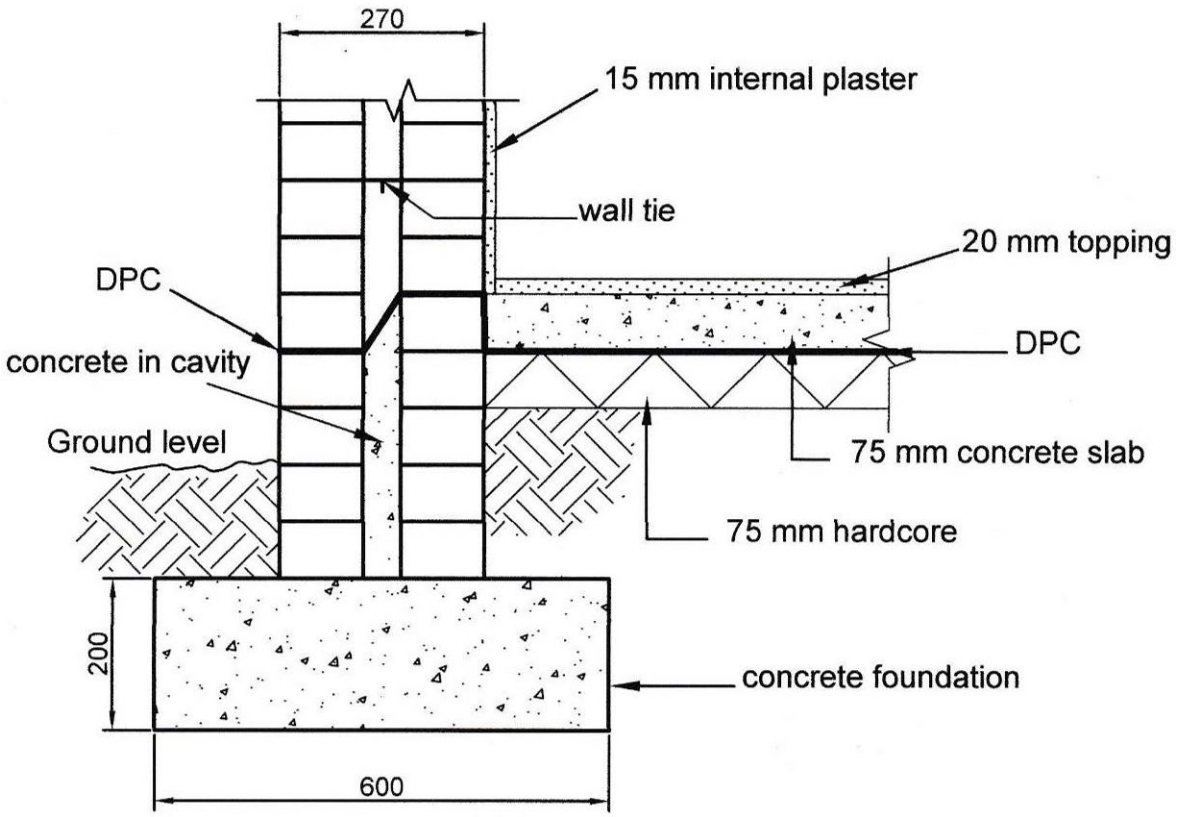

MARKING CRITERIA	MARK ALLOCATION				TOTAL ACHIEVED
Approximate scale	=	1	1	0	1
Concrete strip foundation	=	1	1	0	1
Concrete floor slab	=	1	1	0	1
Screed	=	1	1	0	1
Hardcore	=	1	1	0	1
Plaster internal	=	1	1	0	1
Ground level	=	1	1	0	1
Top of floor slab	=	1	1	0	1
Damp-proofing	=	1	1	0	1
Wall tie	=	1	1	0	1
Concrete to cavity	=	1			1
Hatching to foundation, floor slab and hard core	=	1	1	0	1
Labels	=	1	1	0	1
Correctness	=	2	1	1	2
TOTAL					**15**

(15)

2.3

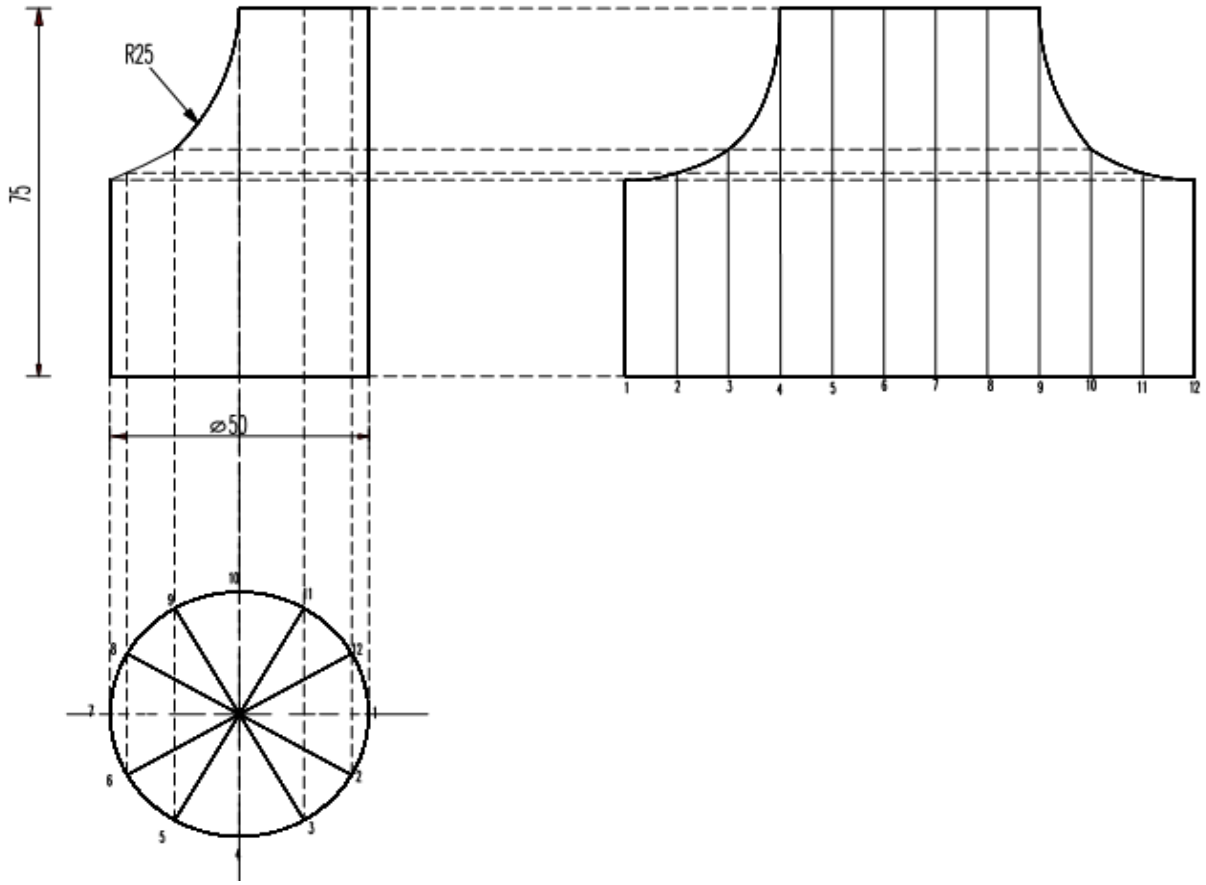

MARKING CRITERIA	MARK ALLOCATION				TOTAL ACHIEVED
Top view	=	1	1	0	2
Front view	=	1	1	0	2
Development	=	3	1	0	4
Construction lines	=	1	1	0	1
Correctness	=	1	1	0	1
Title	=	1	1	0	1
Scale	=	1	1	0	1
TOTAL					**12**

(12)
[30]

QUESTION 3

3.1 3.1.1
- Responsible for financing the building project
- Lender needs to find out if borrower can afford to pay back loan.

3.1.2
- Ensures that the contractor is adhering to building standards
- Builds structure according to specifications of architect

3.1.3
- Determines quantities of materials for structure using plans and drawings
- Controls costs of building contract

3.1.4
- Commissions architect to design structure
- Contracts a contractor to build structure

3.1.5
- Designs structure according to regulations
- Ensures building is constructed according to plans and drawings
- Responsible for way structure looks (Any TWO)

(5 × 2) (10)

3.2 3.2.1 True
3.2.2 False
3.2.3 False
3.2.4 True
3.2.5 True
3.2.6 True
3.2.7 False

(7 × 1) (7)

3.3 3.3.1
- Established according to the Engineering Profession Act, 2000.
- Educates and trains engineers
- Aims to give engineering profession a good name
- Works to get South African engineering up to international standards (Any THREE)

3.3.2
- Set up by parliament to regulate and develop South African industry
- Aims to make South African construction competitive by international standards
- Encourages small businesses in construction industry

3.3.3
- Protects public against untrained architects by having them registered with the council
- Code of conduct for registered architects on dealing with clients
- Develops and registers training programmes for architects

(3 × 3) (9)

3.4
- Established South African Council for Quantity Surveying Profession
- Registration of professionals, candidates and specified categories in the quantity surveying profession
- Regulation of relationship between South African Council for the Quantity Surveying Profession and Council for the Built Environment (Any 2 × 2) (4)

[30]

QUESTION 4

4.1
- Name of applicant
- Address
- Specifications, plans and documents of building
- Full name of registered owner of property if applicant is not the owner (4)

4.2 4.2.1 Ensuring that buildings address important interests of community

4.2.2 Ensuring that buildings are of high quality to achieve stated goal

4.2.3 Stating performance required in quantitative terms to achieve functional requirement

4.2.4 Systems allowing compliance with performance requirements to be checked

(4 × 2) (8)

4.3
- Standard Building Regulations of 1962
- National Building regulations and Building Standards Act No 103
- National Building regulations and Building Standards Act No 30
- SABS 0400 of 1987
- SANS 10400
- New SANS 10400 (Any 3 × 1) (3)

Copyright reserved

4.4 A registered person in terms of the Engineering Professions of South Africa Act, 1990 (Act 114 of 1990),✓ or a person registered in terms of section 11 of the Natural Scientific Professions Act, 1993 (Act 106 of 1993),✓ and holding the indemnity insurance prescribed by the council✓ in respect of the certification of the following:

(a) Appropriateness of design and construction of homes✓

(b) Compliance with the Home Building Manual✓

(c) Any other matter that may be required to be certified in terms of the Home Building Manual✓ (6)

4.5
4.5.1 collection
4.5.2 Babylon
4.5.3 prologue
4.5.4 authority
4.5.5 Five
4.5.6 address
4.5.7 construction
4.5.8 failures
4.5.9 buildings

(9 × 1) (9)
[30]

TOTAL: 100

Copyright reserved