higher education & training

Department:
Higher Education and Training
REPUBLIC OF SOUTH AFRICA

NATIONAL CERTIFICATE (VOCATIONAL)

CONSTRUCTION PLANNING
NQF LEVEL 3

(12010253)

26 February 2018 (X-Paper)
09:00–13:00

REQUIREMENTS: A3 drawing paper

Candidates will require drawing instruments.

This question paper consists of 5 pages and 2 diagram sheets.

Copyright reserved

TIME: 4 HOURS
MARKS: 100

INSTRUCTIONS AND INFORMATION

1. Answer ALL the questions.
2. Read ALL the questions carefully.
3. Number the answers according to the numbering system used in this question paper.
4. Drawings, sketches and diagrams must be done in pencil.
5. Sketches and/or diagrams must be neat, reasonably large, in proportion and fully labelled.
6. Rule off across the page after each completed question.
7. ALL abbreviations and symbols must comply with the latest national building regulations and all relevant SANS (SABS) codes.
8. QUESTION 2.1 and QUESTION 2.2 must be answered on the A3 drawing paper. ALL the other answers must be done in the ANSWER BOOK.
9. Write neatly and legibly.

Copyright reserved

QUESTION 1: COMMUNICATION IN THE CONSTRUCTION INDUSTRY

1.1 Explain the importance of clear communication in the construction industry between the following stakeholders:

1.1.1 The *client* and the *design team.*

1.1.2 The *contractor* and the *contractor's employees.*

(4 × 2) (8)

1.2 State TWO advantages of the bill of quantities (BOQ), as a method of communication in the construction industry. (2 × 1) (2)

[10]

QUESTION 2: TECHNICAL DRAWINGS

2.1 FIGURE 1, DIAGRAM SHEET 1 shows a pictorial view of a shaped figure.

Do NOT copy the given view but draw in first-angle orthographic projection the following views:

- Front view as indicated in the direction of arrow F.
- Left view
- Top view

Show ALL hidden detail. Do NOT include any dimensions. (12)

NOTE: This drawing must be done on the provided A3 drawing sheet.

2.2 FIGURE 2, DIAGRAM SHEET 2 shows an elevation view of part of a wall and a door.

Using a scale of 1:2 and the specifications below draw a horizontal section through A-A. Fully label the drawing.

- Wall: 110 mm plastered on both sides.
- Plaster: 15 mm both sides
- Door Frame: Mild steel casing 150 mm wide and 42 mm thick.
- Rebate 47 mm x12 mm
- Door: 44mm thick (12)

2.3 Name the THREE advantages of using freehand drawings as a method of communication on a construction site. (3 × 2) (6)

[30]

Copyright reserved

QUESTION 3: THE SOUTH AFRICAN CONSTRUCTION INDUSTRY

3.1 State the functions of the following regulatory bodies:

3.1.1 South African Council for the Quantity Surveying Profession (SACQSP)

3.1.2 South African Council for Project Management and Construction Management Profession (SACPCMP)

3.1.3 South African Federation of Civil Engineering Contractors (SAFCEC)

3.1.4 National Home Builders Registration Council (NHBRC)

(4 × 3) (12)

3.2 Briefly describe the following stakeholders in the construction industry:

3.2.1 Subcontractor

3.2.2 Building inspector

3.2.3 Architect

3.2.4 Project manager

3.2.5 Geotechnical engineer

3.2.6 Mortgage lender

(6 × 2) (12)

3.3 Indicate whether the following statements are TRUE or FALSE. Choose the answer and write only 'true' or 'false' next to the question number (3.3.1–3.3.6) in the ANSWER BOOK.

3.3.1 The Concrete Manufacturers Association improves the standard of timber products so that people can rely on and will buy it.

3.3.2 The Institute for Timber Construction supports people in the timber industry so they can do more business.

3.3.3 The Clay Brick Association of South Africa provides a place where clients can go to find people who sell clay bricks and burnt masonry.

3.3.4 The Masters Builders Association protects employees in the transport industry.

3.3.5 The South African Institute of Steel Construction aims to promote the use of steel in construction projects.

3.3.6 The Institute of Plumbing South Africa is not the only plumbing authority in South Africa.

(6 × 1) (6)

[30]

QUESTION 4: CONSTRUCTION LEGISLATION AND REGULATIONS

4.1 List THREE acceptance criteria with regard to the requirements of SANS 10400 and local bylaws. (3 × 1) (3)

4.2 Describe the difference between national building regulations and local bylaws. (2 × 2) (4)

4.3 Contractors have an obligation to ensure that all work done is compliant with the regulations of the local authority.

Name FOUR reasons a local authority may reject an application according to the requirements of the Building Regulation and Building Standards Act. (4 × 1) (4)

4.4 Explain the responsibilities of a competent person according to A19: Appointment of persons responsible for the design. (5 × 1) (5)

4.5 Which procedure should be followed when there are contradictions between the specification on a drawing and the national standards after the drawing have been approved? (2)

4.6 In 1962 the Standard Building Regulations, like the National Building Standards, was a statutory document enacted as Act 33 of 1962.To make it easier to apply the National Building Regulations, SANS 10400 was drawn up in 1990.

Write down in point form the evolution of laws and regulations in the construction industry between 1962 and 1990. (3 × 2) (6)

4.7 List any THREE benefits of the 'register of contractors' determined by the Construction Industry Development Board (CIDB) (3 × 2) (6)

[30]

TOTAL: 100

Copyright reserved

DIAGRAM SHEET 1

QUESTION 2.1

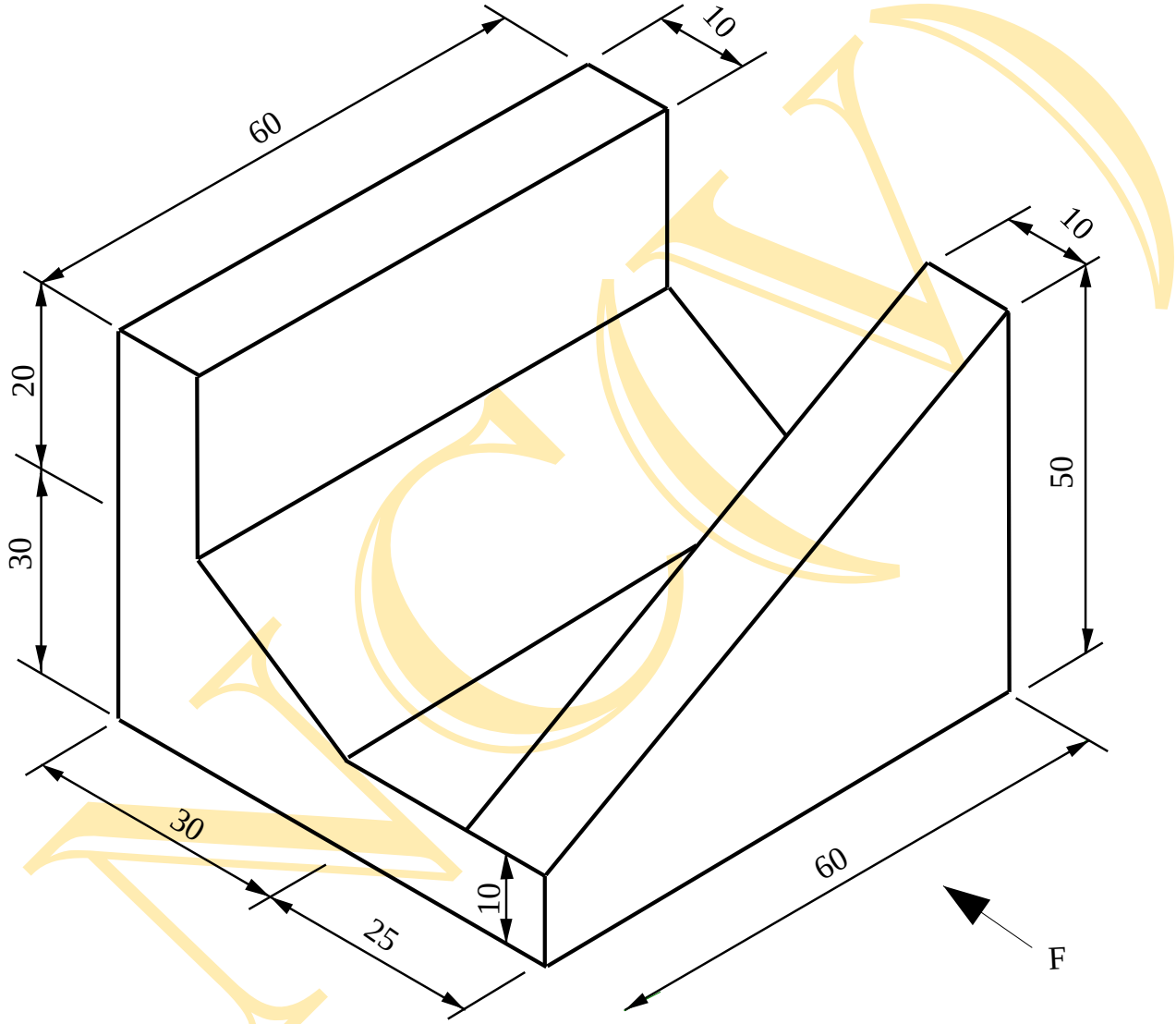

FIGURE 1

DIAGRAM SHEET 2

QUESTION 2.2

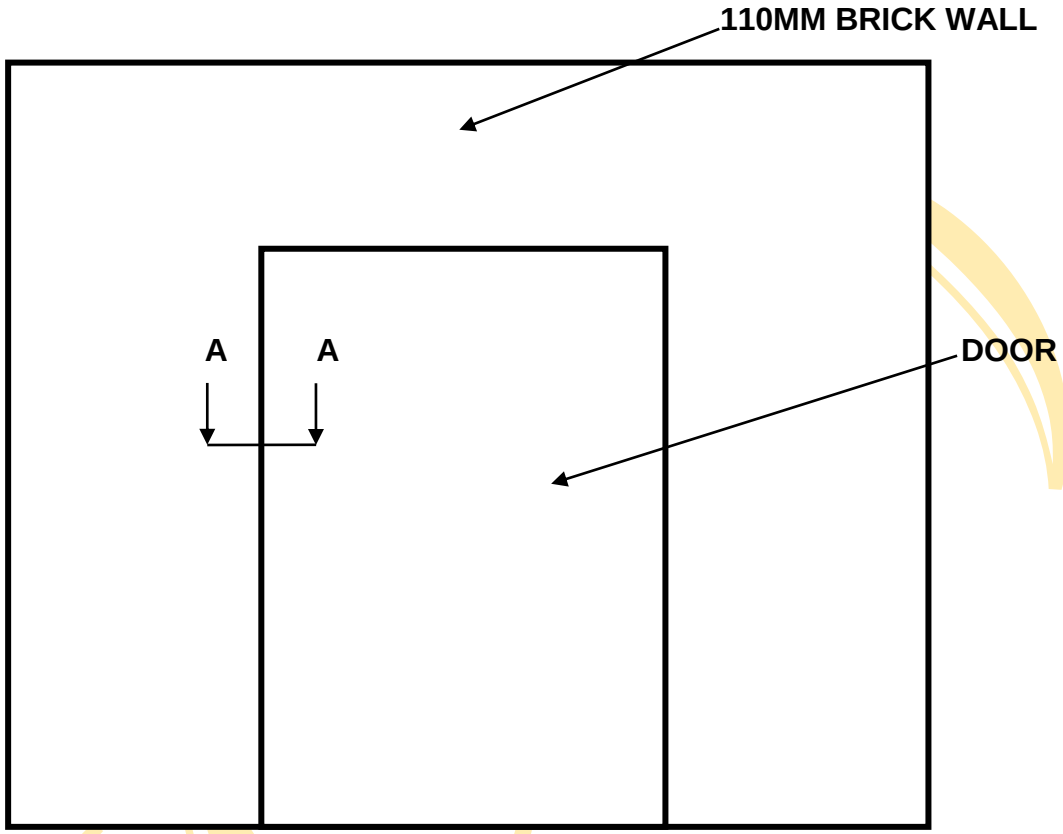

FIGURE 2

Copyright reserved