higher education & training

Department:
Higher Education and Training
REPUBLIC OF SOUTH AFRICA

NATIONAL CERTIFICATE (VOCATIONAL)

CONSTRUCTION PLANNING
NQF LEVEL 2

(12010042)

27 February 2018 (X-Paper)
09:00–12:00

This question paper consists of 7 pages and 2 diagram sheets.

NCV

TIME: 3 HOURS
MARKS: 100

INSTRUCTIONS AND INFORMATION

1. Answer ALL the questions.
2. Read ALL the questions carefully.
3. Number the answers according to the numbering system used in this question paper.
4. The drawings, sketches and diagrams must be done in pencil.
5. The sketches and/or diagrams must be neat, reasonably large, in proportion and fully labelled.
6. Rule off across the page after each completed question.
7. ALL work you do NOT want to be marked must be clearly crossed out.
8. ALL the abbreviations and symbols must comply with the latest National Building Regulations and all relevant SANS (SABS)-codes.
9. Write neatly and legibly.

Copyright reserved

QUESTION 1: TERMINOLOGY AND COMPONENTS OF THE CONSTRUCTION INDUSTRY

1.1 Explain the following construction terminology:

1.1.1 Specification (2)

1.1.2 Variation (2)

1.1.3 Servitude (2)
[6]

QUESTION 2: MEASURING, SETTING OUT AND LEVELLING

2.1 A steel measuring tape is one of the most common measuring tools used on a building site.

2.1.1 State TWO advantages of a steel measuring tape. (2)

2.1.2 State TWO disadvantages of a steel measuring tape. (2)

2.2 Name TWO instruments that are used when performing the following activities on a construction site.

2.2.1 Measuring angles (2)

2.2.2 Setting out (2)

2.2.3 Levelling (2)

2.3 Choose the correct word for each description below. Write only the word next to the question number (2.3.1 – 2.3.5) in the ANSWER BOOK.

Tacheometric ; Datum ; Elevation ; Bench mark ; Stadia lines

2.3.1 The altitude of a place above sea level (1)

2.3.2 A post or other permanent mark established at a known elevation that is used as the basis for measuring the elevation of other topographical points. (1)

2.3.3 A reference system or an approximation of the earth's surface against which positional measurements are made for computing locations. (1)

2.3.4 Cross hairs on the reticle of a theodolite or other surveying instrument that allow stadiametric range finding. (1)

2.3.5 A method of measuring both horizontal distance and vertical elevation of a point in the distance, without the use of sophisticated technology, such as electronic distance measurement. (1)

Copyright reserved

2.4 Discuss the 'two peg test' method that is used to test the accuracy of a levelling instrument. (5)

2.5 What are the disadvantages of using a water level? (4 × 1) (4)

[24]

QUESTION 3: FOUNDATIONS

3.1 Show your understanding by explaining the following shallow foundations:

3.1.1 Strip foundation (2)

3.1.2 Raft Foundation (2)

3.1.3 Pad foundation (2)

3.2 Briefly explain how a site investigation is conducted to identify which foundation should be utilised when erecting a new building or structure. (4)

[10]

QUESTION 4: BEHAVIOUR OF STRUCTURES

4.1 Briefly explain the following terms used in engineering:

4.1.1 Force (2)

4.1.2 Strength (2)

4.1.3. Strain (2)

4.2 Columns are important structural members that transmit the weight of a roof to the foundation of a structure.

Briefly explain how the effective length of a column is reduced to prevent it from buckling. (1)

4.3 Draw a neat freehand cross sectional sketch of the following structures and use lines to show the position of their horisontal neutral axis.

4.3.1 Rectangular Beam (3)

4.3.2 Circular Pipe (3)

4.3.3 Angle iron (3)

Copyright reserved

4.4 FIGURE 1, DIAGRAM SHEET 1 (attached) shows an illustration of a pin – jointed frame structure. Answer the following questions related to this illustration.

4.4.1 What type of stress will the structure experience in the top member marked 'A'. (1)

4.4.2 What type of stress will the structure experience in the bottom member marked 'E'. (1)

4.4.3 State whether members ', 'B', 'C', 'D' are struts or ties. (3)

4.5 State the difference between the following:

4.5.1 Axial load and eccentric load (2)

4.5.2 Point load and uniformly distributed load (2)

[25]

QUESTION 5: INTERNATIONAL SYSTEM (SI) UNITS OF MEASUREMENTS

5.1 Choose an item from COLUMN B that matches a description in COLUMN A. write only the letter (A–E) next to the question number (5.1.1–5.1.5) in the ANSWER BOOK.

COLUMN A		COLUMN B
5.1.1	10^{6}	A Kilo
5.1.2	10^{-2}	B Giga
5.1.3	10^{-6}	C Mega
5.1.4	10^{3}	D Centi
5.1.5	10^{9}	E Micro

(5 × 1) (5)

5.2 Convert the following:

5.2.1 0,003 m to mm

5.2.2 9,5 hours to seconds

(2 × 1) (2)

5.3 Give the SI unit for the following:

5.3.1 Force

5.3.2 Pressure

5.3.3 Acceleration

(3 × 1) (3)
[10]

QUESTION 6: AREAS AND VOLUME

6.1 A rectangular room has a wall 6 m long and 5 m wide. The height of the wall is 3 m. It has a door 2,2 m x 1,2 m and 2 windows both size 2 m x 2 m.

SPECIFICATION:
1 m^2 = 50 bricks
Thickness of plaster 15 mm

6.1.1 Calculate the number of bricks needed to build the room. (8)

6.1.2 Calculate the volume of plaster needed to plaster the inside walls only. (2)
[10]

QUESTION 7: TECHNICAL DRAWINGS

7.1 Indicate whether the following statements are TRUE or FALSE. Choose the answer and write only 'true 'or 'false' next to the question number (7.1.1–7.1.4) in the ANSWER BOOK.

7.1.1 The scale that is used on plans represent the actual size of the structure (1)

7.1.2 Hatching symbols are the measurement or sizes of a structure on a drawing (1)

7.1.3 The symbols that are used on drawing plans communicate instructions to the contractor in a short and effective way. (1)

7.1.4 A sectional view on a drawing shows the external three dimensional view of the structure (1)

Copyright reserved

7.2 Different types of abbreviations are used on plans to show different materials and items. Write in full the following abbreviations:

7.2.1 DPC (1)

7.2.2 FFL (1)

7.2.3 MH (1)

7.2.4 SWD (1)

7.2.5 VP (1)

7.2.6 WC (1)

7.3 A building construction worker is required to know the symbols, materials and specification on a building plan. FIGURE 2, DIAGRAM SHEET 2, shows a vertical section through an external wall of a dwelling.

Interpret the drawing and identify the hatching convention to be used when erecting the structure.

Write only the name of the hatching convention next to the question number (7.3.1 – 7.3.5) in the ANSWER BOOK.

(5 x 1) (5)

[15]

TOTAL: 100

Copyright reserved

DIAGRAM SHEET 1

QUESTION 4.4

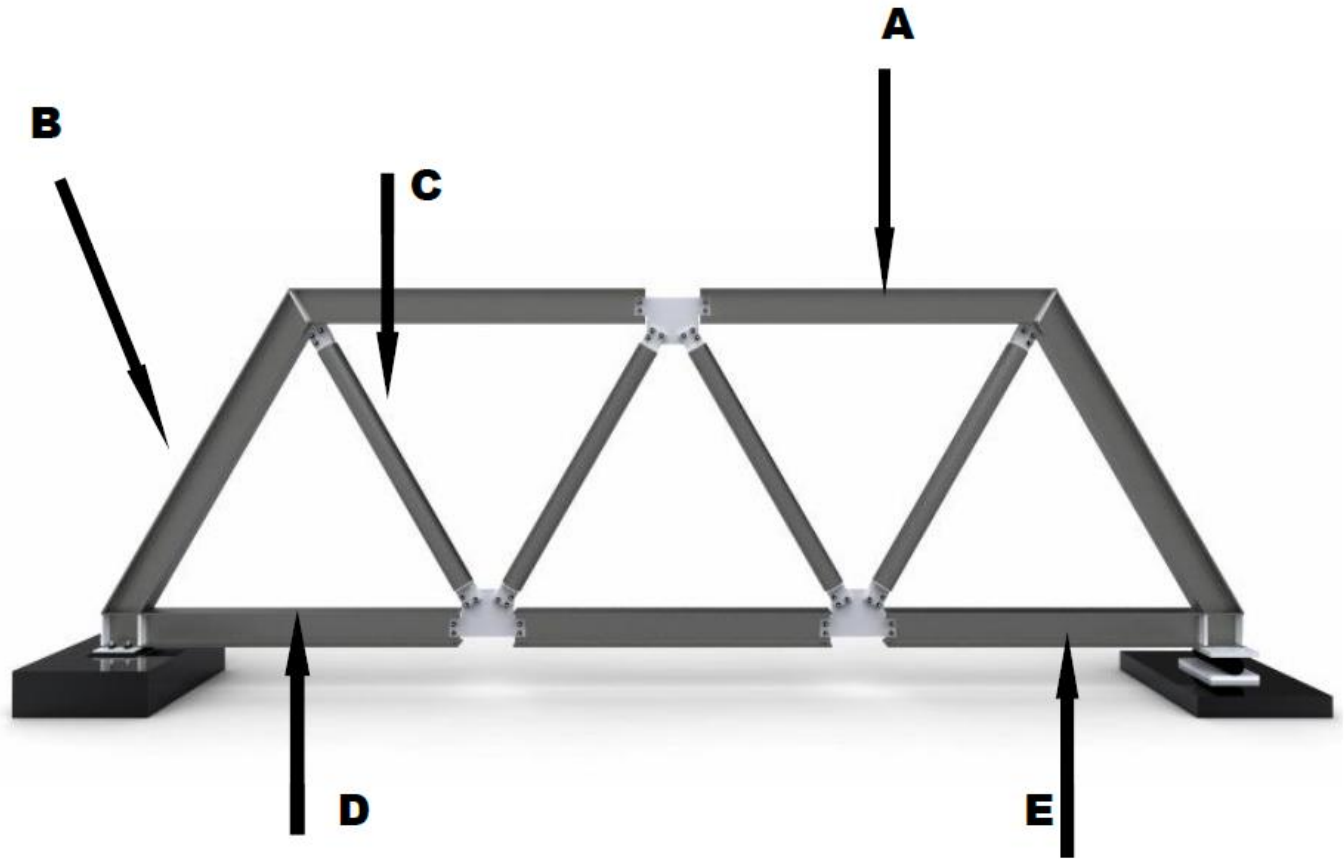

FIGURE 1

NC

DIAGRAM SHEET 2

QUESTION 7.3

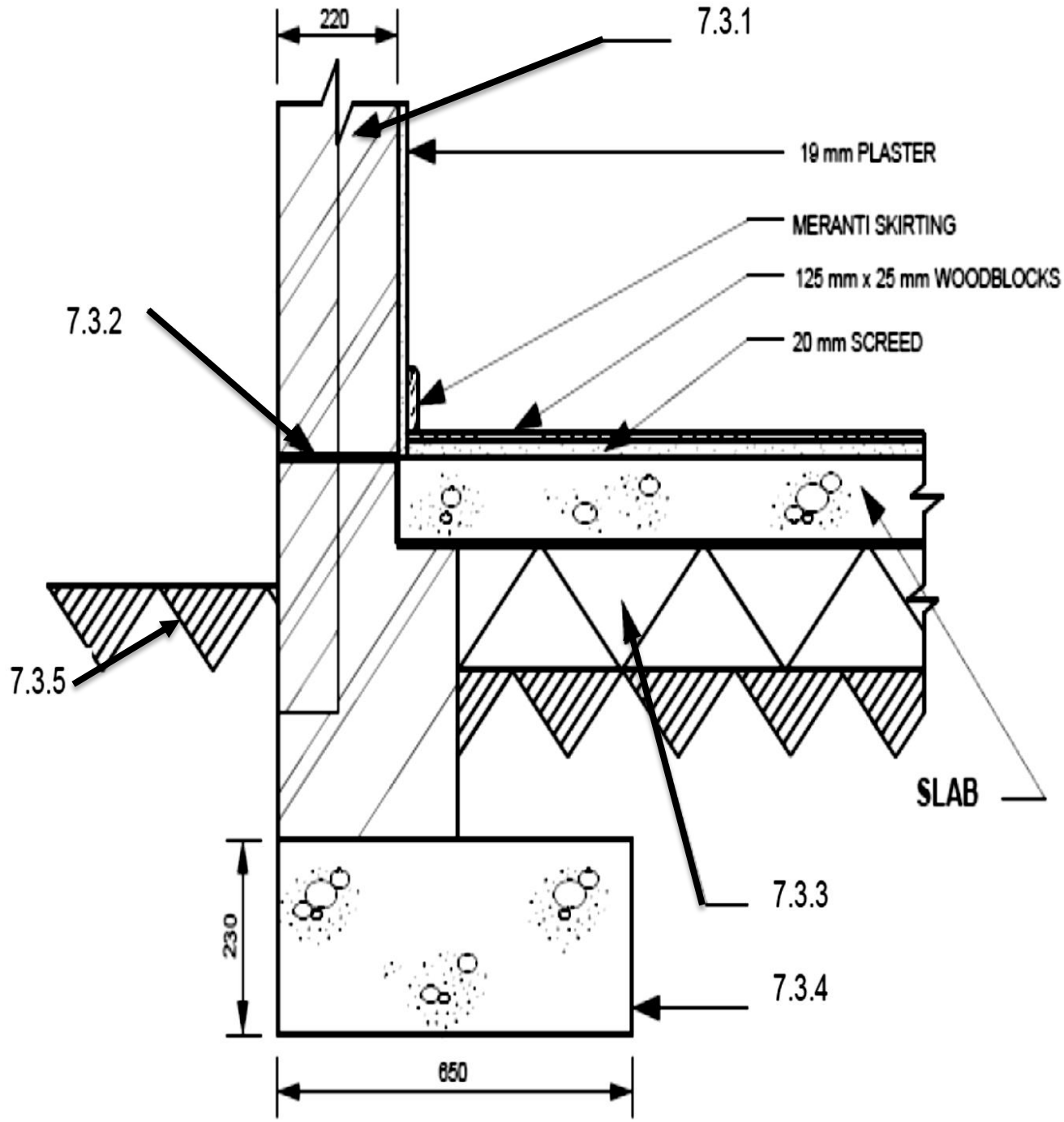

VERTICAL SECTION THROUGH AN EXTERNAL WALL

FIGURE 2

Copyright reserved