higher education & training

Department:
Higher Education and Training
REPUBLIC OF SOUTH AFRICA

MARKING GUIDELINE

NATIONAL CERTIFICATE (VOCATIONAL)

CONCRETE STRUCTURES
NQF LEVEL 2

11 March 2020

This marking guideline consists of 7 pages.

Copyright reserved

QUESTION 1: INTRODUCTION TO FORMWORK AND FALSEWORK

1.1 True
1.2 False
1.3 True
1.4 True
1.5 False
1.6 True
1.7 False
1.8 False
1.9 False
1.10 False

(10 × 1) **[10]**

QUESTION 2: FORM FACE MATERIALS AND SPECIAL TYPES OF FORMS

2.1

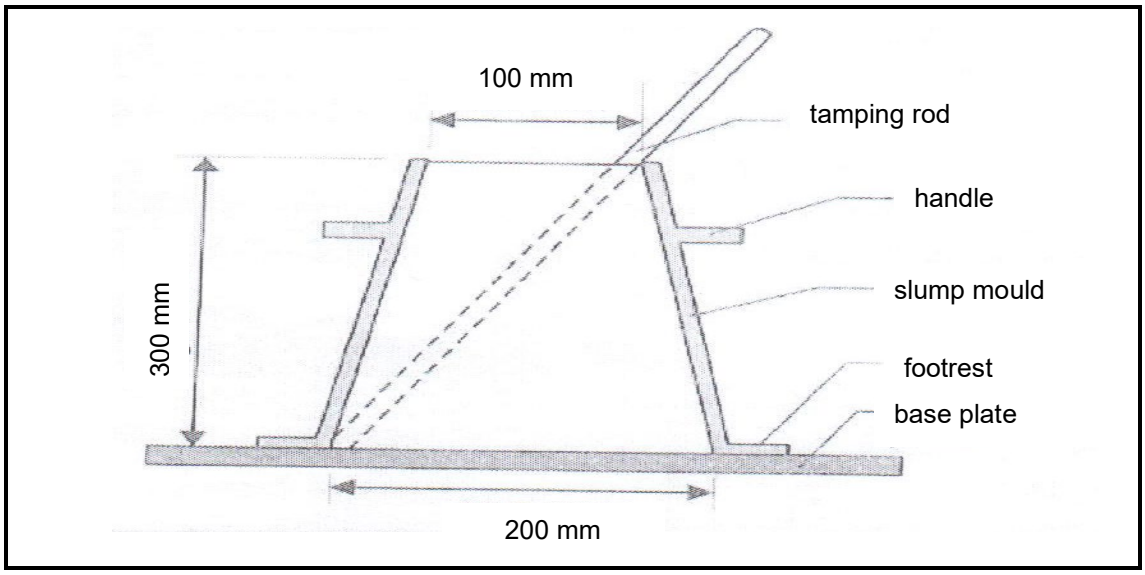

Slump test apparatus

Mark allocation:

DIMENSIONS	CORRECTNESS	LABELS
2 × ½	4 × ½	2

(4)

2.2
- Limits absorption of water
- Affects colour and texture of concrete (2)

2.3 Type of engineering wood✓ from at least 3 layers of thin sheets of wood glued together so that grain is 90° to layer above and below✓ (2)

2.4 Bottom of beam or structure which rest on ground.✓ Ground containing clay may be sensitive to expansion which may put pressure on bottom of structure which needs to be prevented.✓ (2)

[10]

QUESTION 3: PRESSURE RESISTED BY FORMWORK AND FALSEWORK

3.1 Pressure = density × gravity × height✓

$= 1\,000\ kg/m^3 \times 9.8/\ m/s^2 \times 8m$✓
$= 78\,480\ N/m^{-2}\ or\ 78{,}48\ kNm^{-2}$✓✓✓

Or $= 78480\ Pa\ or\ 78{,}48\ kPa$ (5)

3.2 3.2.1 Density
3.2.2 Easily
3.2.3 Pressure
3.2.4 Greater
3.2.5 Setting

(5 × 1) (5)

3.3

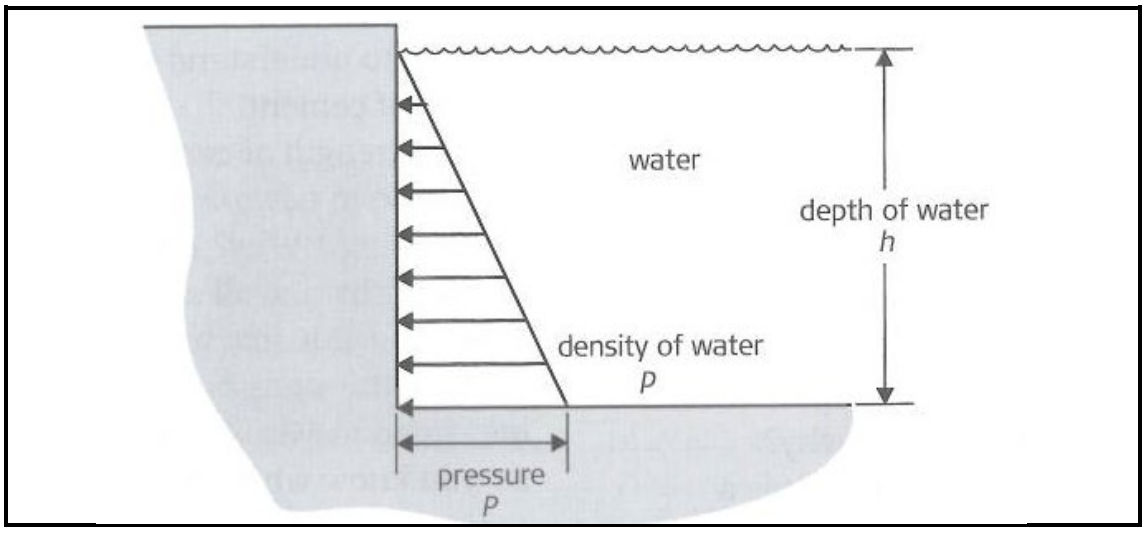

(4)

3.4 Snap ties are removed by breaking them off. (1)

[15]

QUESTION 4: ERECTING FORMWORK AND FALSEWORK

4.1

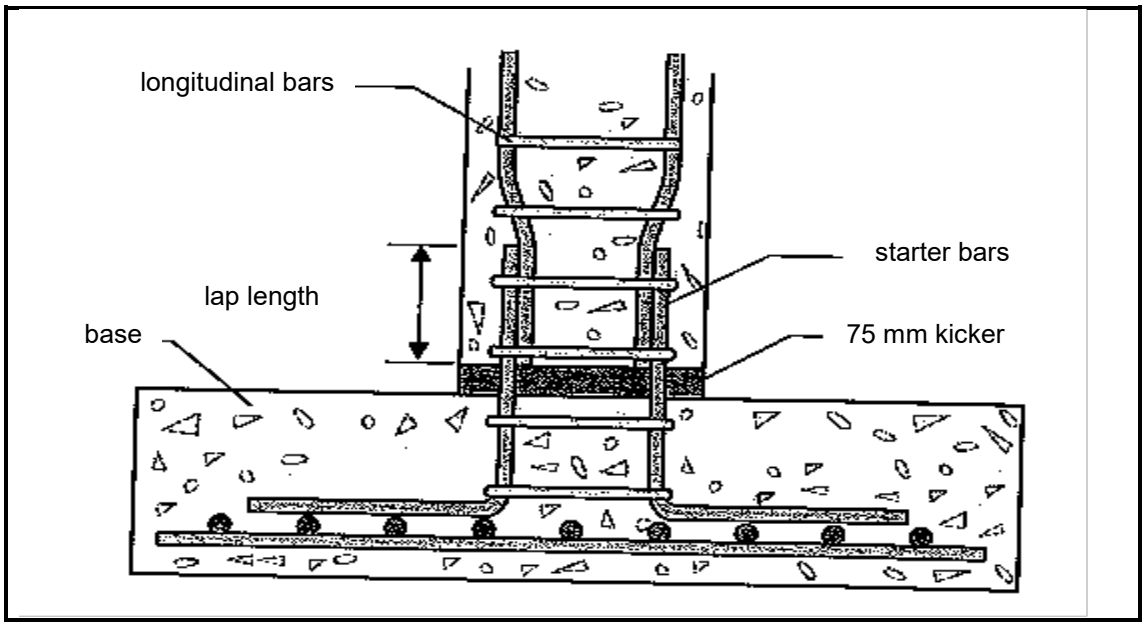

LABELLING	CORRECTNESS:	TOTAL
5	9	14

(14)

4.2

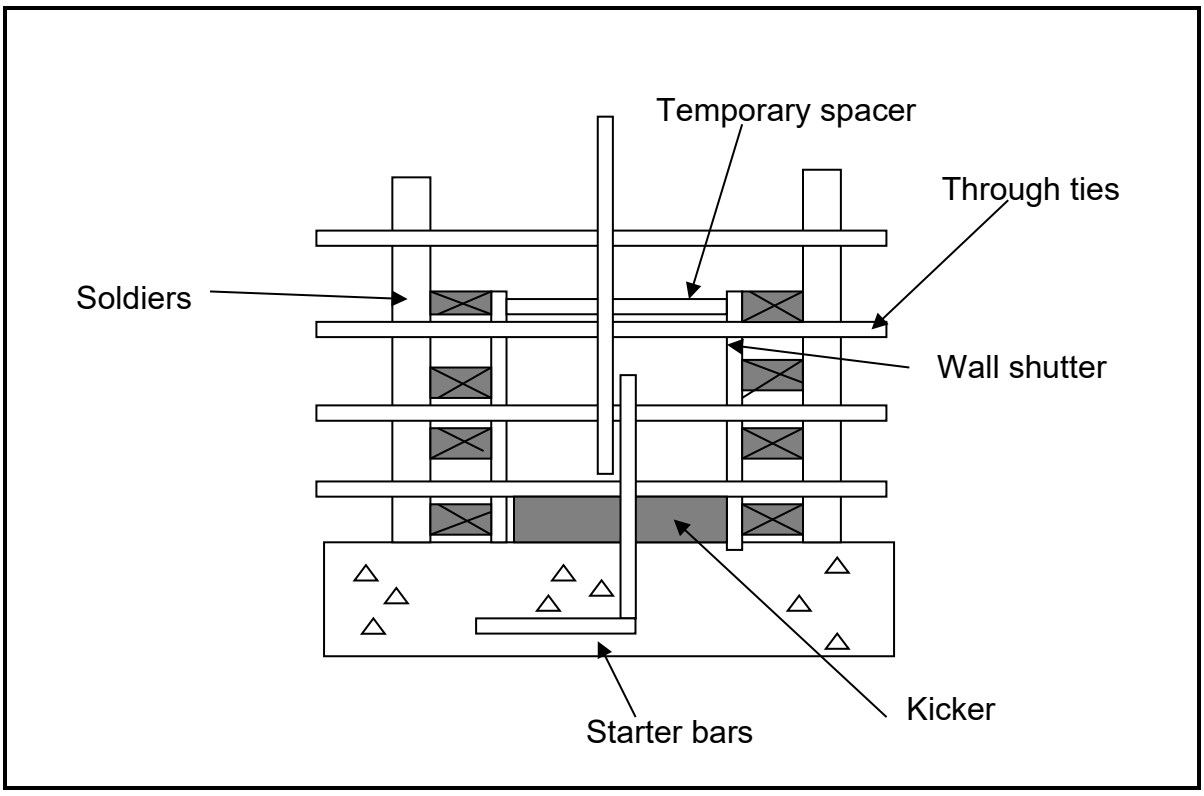

DRAWING	LABELLING	NEATNESS
4	6	1

(11)
[25]

QUESTION 5: VERTICAL STOP-ENDS, WATER STOPS AND JOINTS

5.1 5.1.1 Fresh pour of concrete next to or touching existing one indicating stop in construction process

5.1.2 Allowing relative movement of structure parts next to one another in controlled or uncontrolled way without affecting quality or working of structure

5.1.3 Used to separate new concrete from existing or adjacent construction

(3 × 2) (6)

5.2 Well-prepared in advance✓ and poured throughout until job is finished✓ (2)

5.3
- Flat wheel
- Plant failure
- Bad weather

(Any relevant 2 × 1) (2)
[10]

QUESTION 6: RELEASE AGENTS

6.1
- Avoid contact with skin.
- Wear a mask to avoid fumes.
- Avoid contaminating food.
- Wear protective clothing.
- Following manufacturer's instructions.

(Any relevant 4 × 1) (4)

6.2
- Rug
- Paintbrush
- Roller
- Sprayer

(4)

6.3 24 hours (1)

6.4 28 days (1)
[10]

QUESTION 7: WORKMANSHIP AND DETAILING IN CONCRETE STRUCTURES

7.1

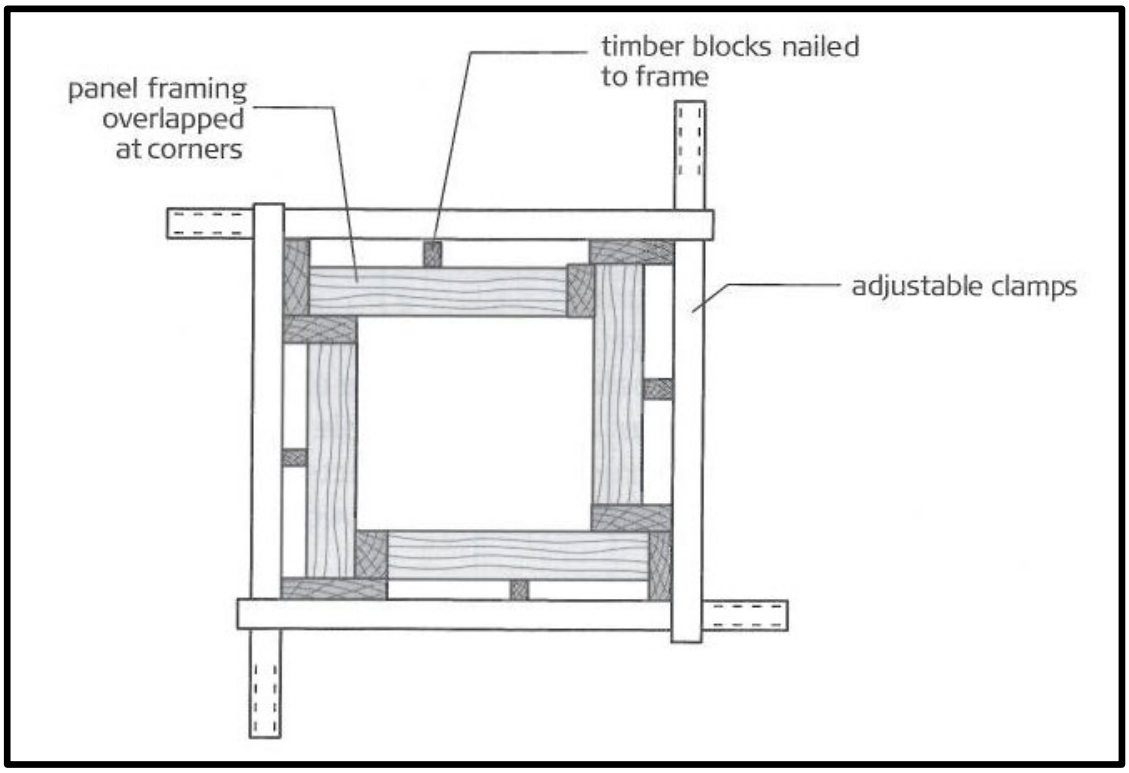

[Source: *Concrete structures Level 2*]

CORRECTNESS	LABELLING	TOTAL
7	3	10

(10)

7.2 Duct tape
Self-adhesive foam gaskets (2 × 1) (2)

7.3 7.3.1
- Delaying evaporation of moisture in concrete
- Controlling the hardening process (Any relevant 1 × 2) (2)

7.3.2
- Concrete may dry out too soon interfering with hardening process
- Strength of concrete may cause cracking (Any relevant 1 × 2) (2)

7.4 Distance from outside face of concrete to nearest surface of reinforcing steel (2)

7.5
- Not using spacers or using wrong size spacers
- Incorrect tolerance (Any relevant 2 × 1) (2)

[20]

TOTAL: 100

Copyright reserved