higher education & training

Department:
Higher Education and Training
REPUBLIC OF SOUTH AFRICA

NATIONAL CERTIFICATE (VOCATIONAL)

CIVIL AND STRUCTURAL STEEL WORK DETAILING (CAD COMPONENT)

(Second paper)

NQF LEVEL 3

(12050663)

3 March 2020 (X-paper)
09:00–11:00

REQUIREMENTS: **A4 drawing sheets**
Yellow cover folder (BOE 8/15)
Standard hot-rolled structural steel section table (BOE 8/1)

Calculators may be used.

This question paper consists of 5 pages.

215Q2S2003

Copyright reserved

TIME: 2 HOURS
MARKS: 75

INSTRUCTIONS AND INFORMATION

1. Answer all the questions.
2. Read all the questions carefully.
3. Number the answers according to the numbering system used in this question paper.
4. Use ONE side of each A4 DRAWING SHEET.
5. Draw a 15 mm border on each DRAWING SHEET.
6. Use your discretion where applicable.
7. Unspecified radii must be R3.
8. All drawing work must conform to the latest SANS 10111 Code of Practice for Engineering Drawing.
9. A balanced layout is very important and candidates will be penalised for poor planning.
10. Insert all loose DRAWING SHEETS in the cover folder – do not staple.
11. Work neatly.

Copyright reserved

QUESTION 1: REINFORCED CONCRETE DETAILING

1.1 A 400 mm by 200 mm rectangular concrete column with six Y20 longitudinal bars and R8 binders at 160 mm centre must be constructed.

Main RS bars (column):	6Y16
Rectangular binders:	R08 – 200
Concrete cover:	50 mm

Draw, to scale 1:5, and label the following sections to show the constructional details with at least 500 mm of the length of the column:

1.1.1 Vertical longitudinal section (10)

1.1.2 Horizontal cross section through the column (10)

1.2 A pile footing delivers a large load to an individual pile. The pile transfers the forces to a lower level in the soil by means of friction between the soil and pile surface and/or the end bearing.

Draw, to scale 1:20, the typical layout of the pile footing using the following data:

Two piles:	Ø100 mm
Column:	Ø500 mm × 500 mm high
Top soil:	1 m
Soft stratum:	3 m
Bearing stratum:	any suitable size
Pile cap/foundation:	1 000 mm wide × 300 mm high
Pile centre to centre:	500 mm

(15)
[35]

QUESTION 2: STRUCTURAL STEEL WORK DETAILING

2.1 A compound beam is made up by welding a rolled steel channel section 240 × 85 × 33,2 kg/m to a rolled steel I–beam (parallel flange) 406 × 178 × 62,7 kg/m as shown in FIGURE 1.

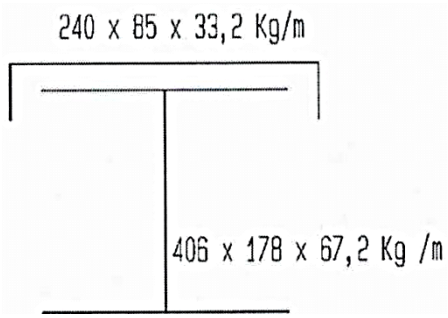

FIGURE 1

Do not copy the given view, but draw, to scale 1:5, a compound beam using the approximately method (true profile) from the steel table. Consult the steel tables for additional information. (10)

Copyright reserved

2.2 A simple column base is shown in FIGURE 2.

Stanchion (column):	406 × 178 × 53,8 kg/m parallel flange
Base plate:	600 × 600 × 20 mm
Gusset plate:	400 × 210 × 10 mm gusset having two equal sides and parallel but perpendicular to the base side
Holes:	Ø20 mm holes 35 mm from the edges at the corners – add your own size if not given

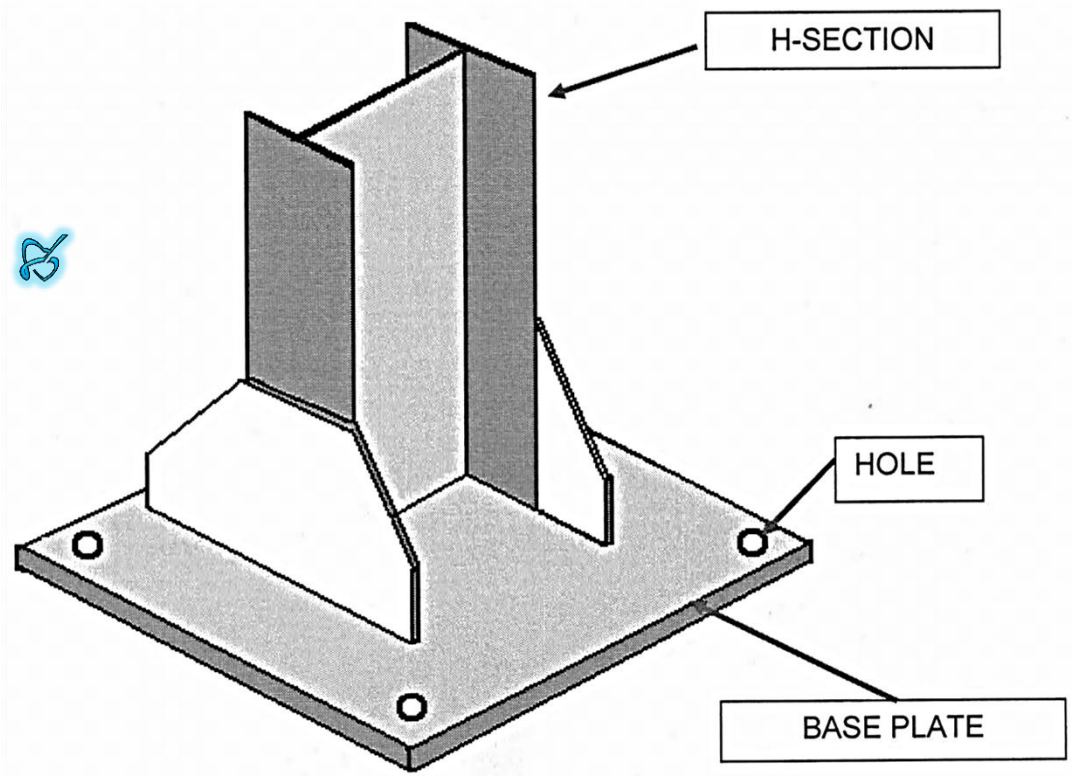

FIGURE 2

Do not copy the given view, but draw, to scale 1:5, the following detailed views in first-angle orthographic projection:

2.2.1 Front view (7)

2.2.2 Top view (8)

[25]

QUESTION 3: STRUCTURAL STEEL WORK DETAILING

FIGURE 3 shows a line diagram (centre lines) of the front view of a typical steel roof truss to be used over a small workshop.

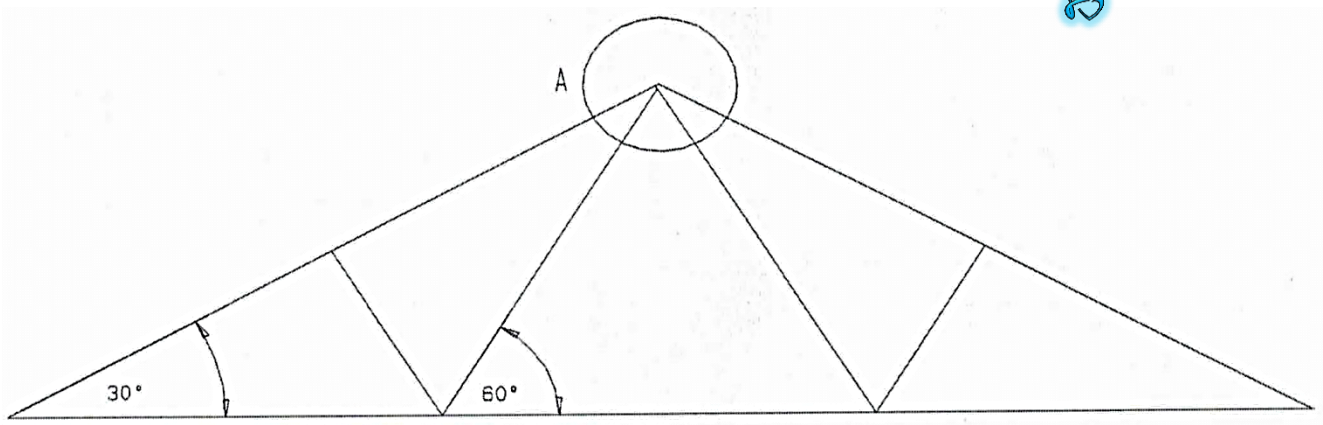

Draw, to scale 1:5, the front view of the joint at A. The four members are connected by means of a 10 mm gusset plate.

Use the following specifications:

Roof pitch (slope):	as indicated on the diagram
Top chord members:	95 × 65 × 8 unequal-leg angles
Struts:	80 × 80 × 8 equal-leg angles
Gusset plate:	10 mm thick

Do not show any bolts or bolt holes. Clearly show the position of the gusset plate, centre lines and all labels. **[15]**

TOTAL: 75

Copyright reserved