higher education & training

Department:
Higher Education and Training
REPUBLIC OF SOUTH AFRICA

MARKING GUIDELINE

NATIONAL CERTIFICATE (VOCATIONAL)

CIVIL AND STRUCTURAL STEEL WORK DETAILING (CAD COMPONENT)

(Second paper)

NQF LEVEL 3

XX February 2020

This marking guideline consists of 7 pages.

Copyright reserved

NOTE TO MARKERS

This marking guideline is not absolute. Consider correct alternative answers. Copying and scanning of drawings will affect the accuracy of the drawings on the marking guideline. All markers must prepare their own marking guideline to use during the marking of candidates' drawing sheets.

QUESTION 1: REINFORCED CONCRETE DETAILING

1.1 1.1.1

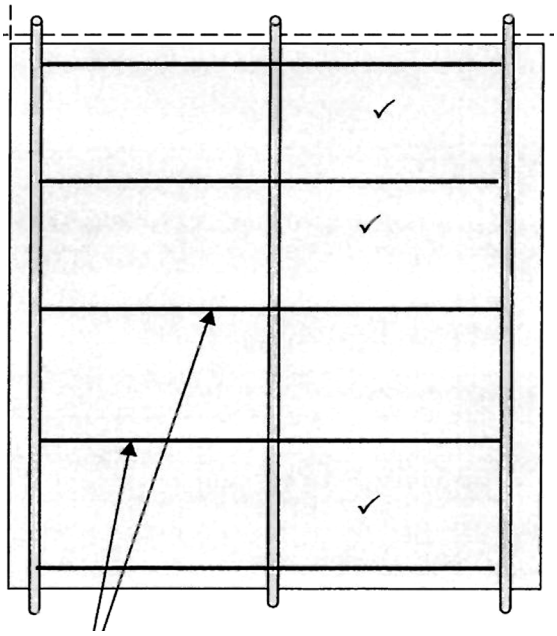

R08 – 200 rectangular binders

RECTANGULAR COLUMN (FRONT VIEW)
SCALE 1:5

MARK ALLOCATION	
Correct scale	1
Correctness of detail	5
Labelling	2
Line work	2

(10)

1.1.2 Main RS bars (column) – 6Y16

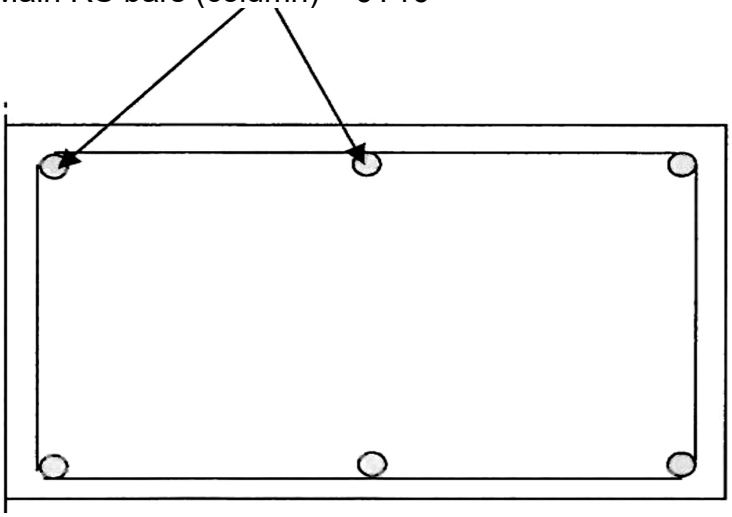

RECTANGULAR COLUMN (TOP VIEW)
SCALE 1:5

MARK ALLOCATION	
Correct scale	2
Correctness of detail	4
Labelling	2
Line work	2

(10)

1.2

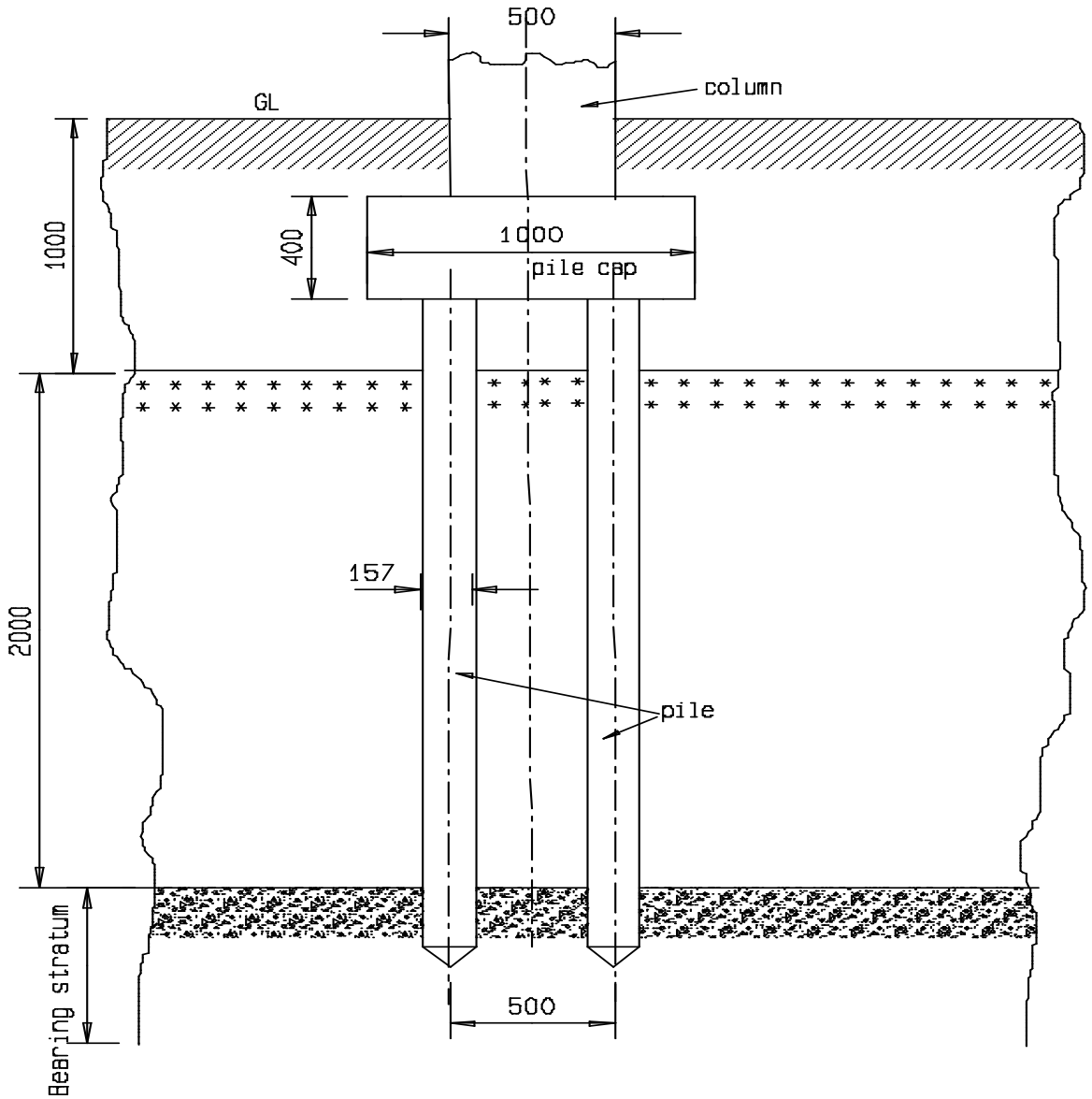

SCALE 1:20

MARK ALLOCATION	
Correct scale	2
Correctness of detail	2
Labelling	2
Pile cap	1
Piles	2
Top soil	1
Soft stratum	1
Bearing stratum	1
Column	1
Line work	2

(15)
[35]

QUESTION 2: STRUCTURAL STEEL WORK DETAILING

2.1

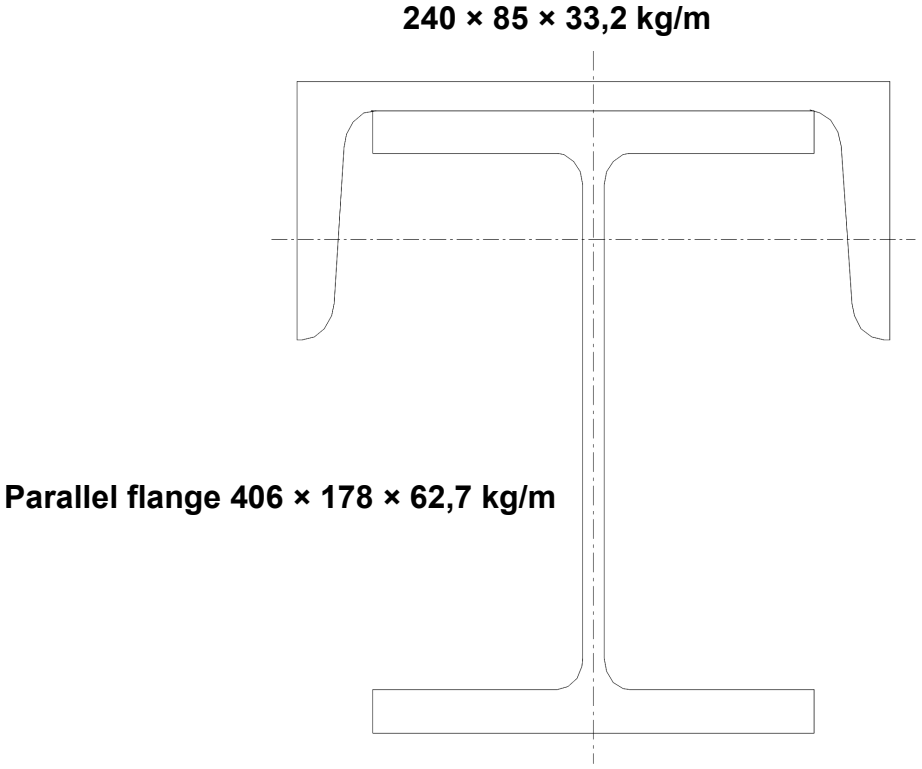

SCALE 1:5

MARK ALLOCATION	
Correctness of channel	3
Correctness parallel flange	3
Line work	2
Correct scale	2

(10)

2.2

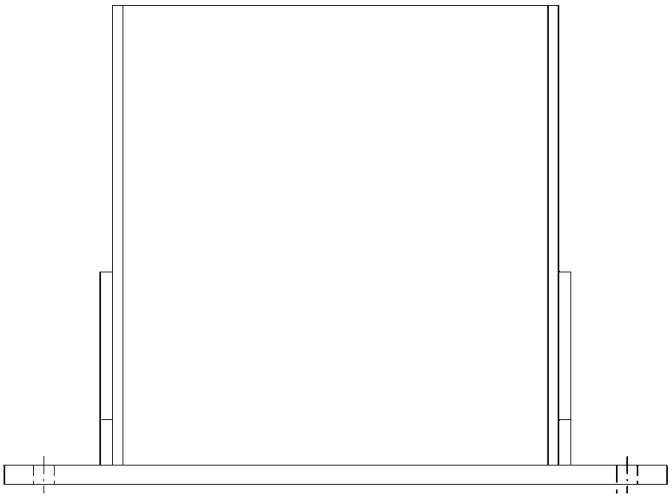

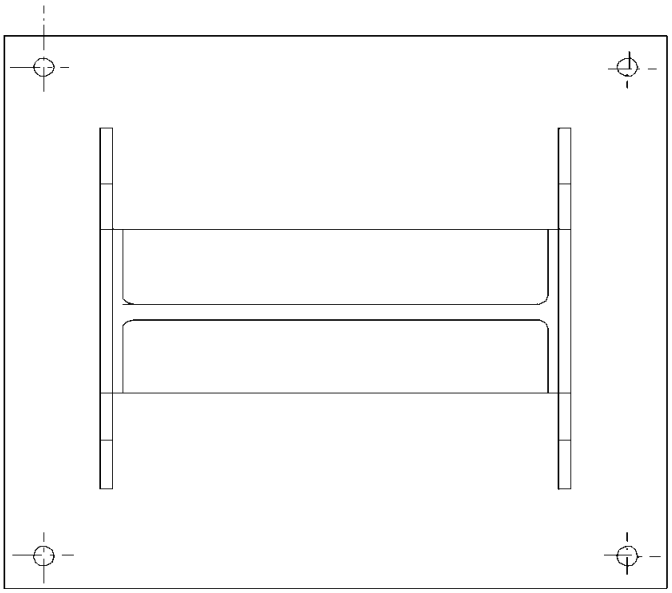

SCALE 1:5

FRONT VIEW		TOP VIEW	
Correctness parallel flange	2	Correctness parallel flange	2
Correctness gusset	2	Correctness gusset	2
Correctness base plate	1	Correctness base plate	2
Line work	1	Line work	1
Correct scale	1	Correct scale	1
TOTAL:	**7**	**TOTAL:**	**8**

(15)
[25]

QUESTION 3: STRUCTURAL STEEL WORK DETAILING

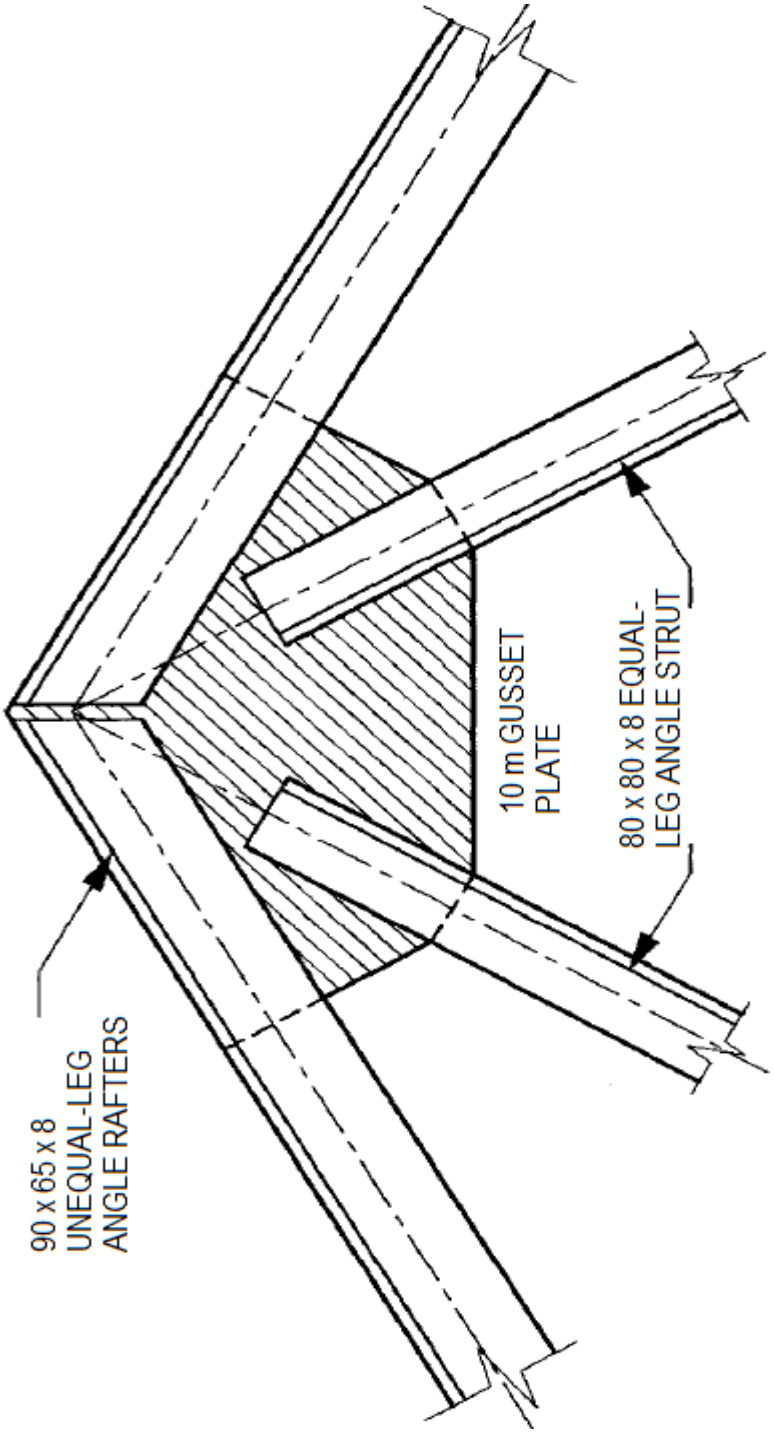

MARK ALLOCATION	
Setting out correct	1
Two rafters correct	4
Two struts correct	4
Gusset plate	3
Line work	3

[15]

TOTAL: 75

Copyright reserved