higher education & training

Department:
Higher Education and Training
REPUBLIC OF SOUTH AFRICA

NATIONAL CERTIFICATE (VOCATIONAL)

CIVIL AND STRUCTURAL STEEL WORK DETAILING (CAD COMPONENT)

(Second Paper)

NQF LEVEL 3

(12050663)

2 March 2018 (X-Paper)
09:00–11:00

REQUIREMENTS: **Yellow cover folder BOE 8/15 and A4 drawing sheets**
Hot-rolled structural steel sections BOE 8/2

Calculators may be used.

This question paper consists of 5 pages and 1 diagram sheet.

Copyright reserved

TIME: 2 HOURS
MARKS: 75

INSTRUCTIONS AND INFORMATION

1. Answer ALL the questions.
2. Read ALL the questions carefully.
3. Number the answers according to the numbering system used in this question paper.
4. Start each question on a NEW page.
5. Rule off across the page on completion of each question.
6. Drawings and sketches must be done neatly using drawing instruments.
7. Insert ALL loose ANSWER SHEETS in the folder – do NOT staple.
8. Write neatly and legibly.

Copyright reserved

QUESTION 1: REINFORCED CONCRETE DETAILING

1.1 Draw, to scale 1 : 20, the reinforcement layout and complete the bending schedule using the following information:

- Base size: 1 950 × 1 950 × 400
- Column size: 280 × 280
- Concrete cover to base: 50
- Concrete cover to stirrups: 30
- Concrete cube strength: 20 MPa (base and column)
- Base reinforcement: Y12 at 200 centres each way
- Column starter bars: 4 Y12
- Links: R8 at 150 centres (15)

1.2 The DIAGRAM SHEET (attached) shows a part reinforced drawing.

- Footing: 500 mm deep
- Binding concrete layer: 75 mm thick
- Column size: 500 mm × 500 mm × 3 000 mm high
- Cover on columns: 60 mmm
- Kicker: 75 mm
- Cover: 50 mm

Draw, to scale 1 : 20, fully labelled cross-sectional views through A–A. (10)
[25]

QUESTION 2: STRUCTURAL STEEL WORK DETAILING

2.1 FIGURE 1 below shows a simple steel roof truss. The webs are joined with 20 mm rivets onto gussets.

Use any suitable scale to draw detail A, B, C and D.

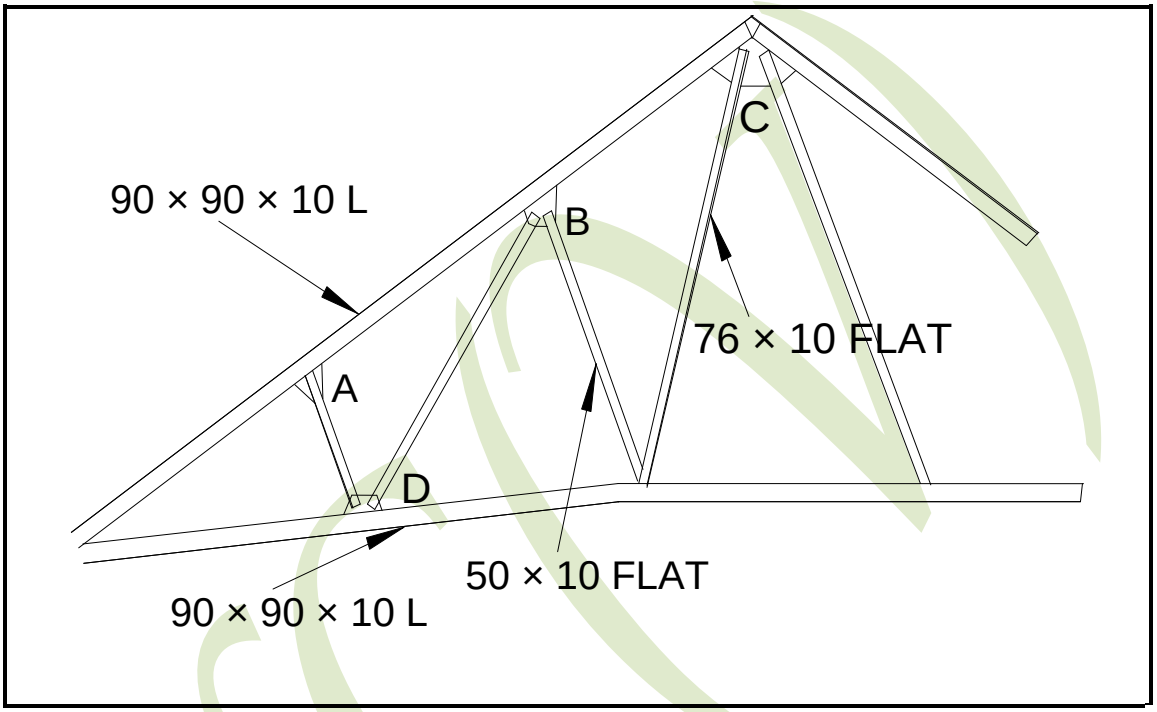

FIGURE 1 (20)

2.2 Figure 2 below shows a typical section through a steel portal frame for a church building.

Use a suitable scale to make a neat drawing detailing the connection at 1 and 2.

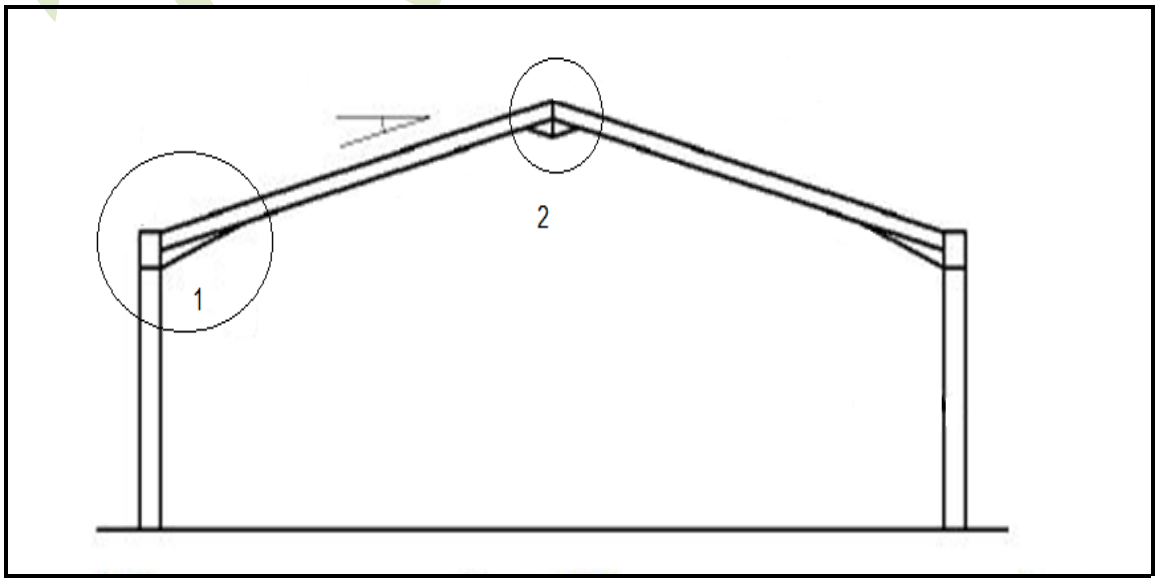

FIGURE 2 (20)

[40]

QUESTION 3: STRUCTURAL STEEL WORK DETAILING

The drawing in FIGURE 3 shows typical welded joints for a roof truss and a bridge truss.

Draw, to scale 1 : 5, the TWO joints using the following specifications:

Top: rolled-steel angle profiles:	120 × 120 × 12 mm
ALL internal members: rolled-steel angle profiles:	90 × 90 × 8 mm
ALL gusset plates:	12 mm thick

Do NOT insert any dimensions.
Information left out is left to your discretion.

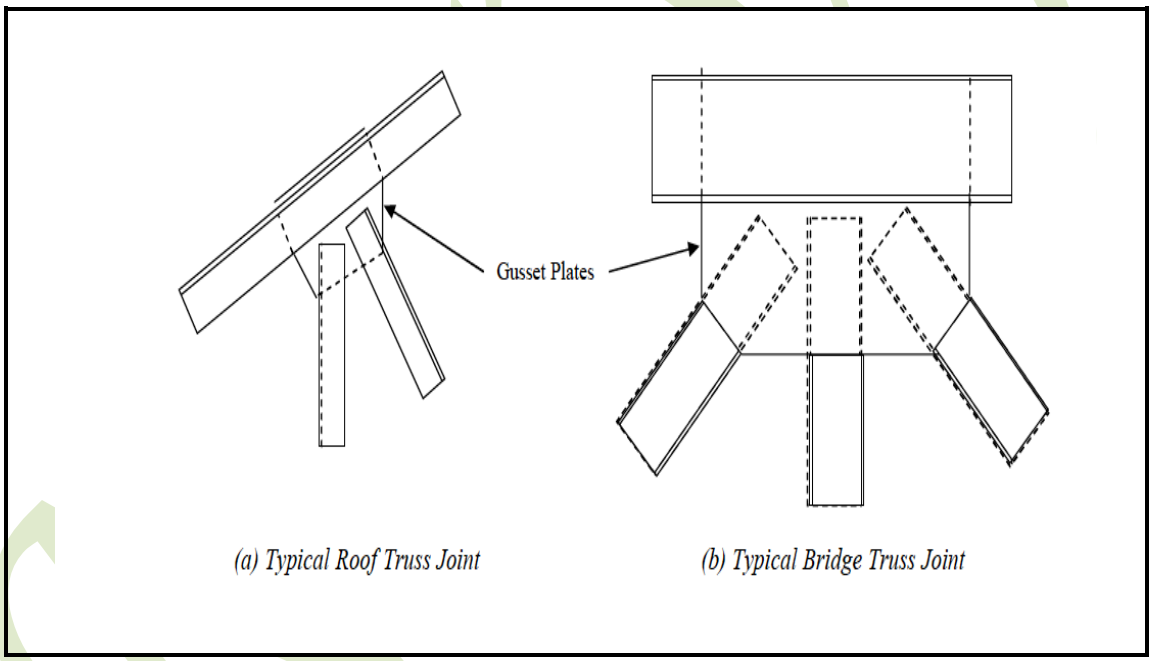

FIGURE 3 **[10]**

TOTAL: 75

Copyright reserved

DIAGRAM SHEET

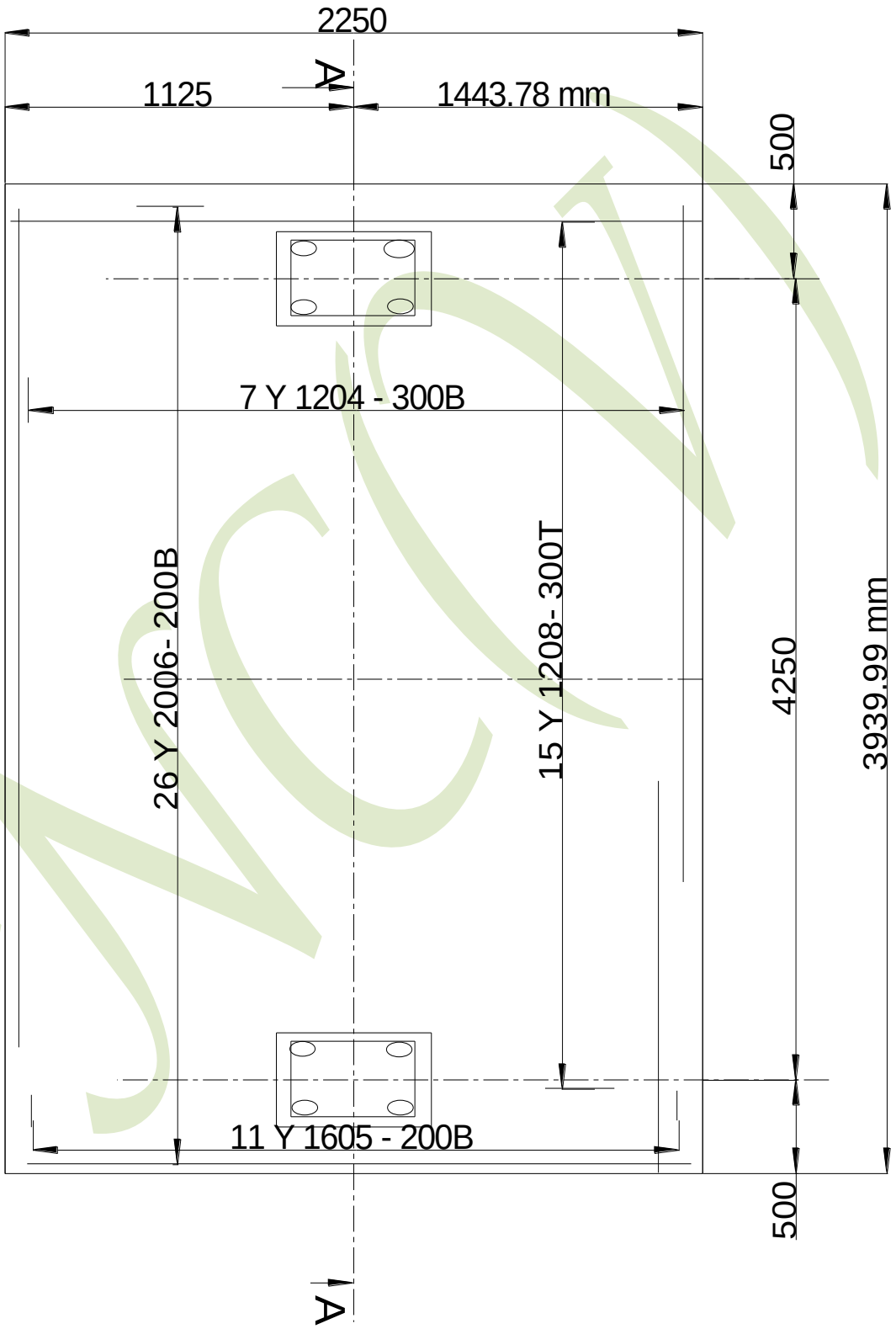

Copyright reserved