higher education & training

Department:
Higher Education and Training
REPUBLIC OF SOUTH AFRICA

NATIONAL CERTIFICATE (VOCATIONAL)

CIVIL AND STRUCTURAL STEEL WORK DETAILING
NQF LEVEL 2

(12050652)

10 December 2020 (X-paper)
09:00–12:00

This question paper consists of 7 pages.

473Q1N2010

Copyright reserved

TIME: 3 HOURS
MARKS: 100

INSTRUCTIONS AND INFORMATION

1. Answer all the questions.
2. Read all the questions carefully.
3. Number the answers according to the numbering system used in this question paper.
4. Start each question on a new page.
5. Use only a black or blue pen.
6. Write neatly and legibly.

Copyright reserved

QUESTION 1: INTRODUCTION TO CIVIL AND STRUCTURAL STEELWORK

1.1 Give TWO factors that determine the type of sections in a structure. (2)

1.2 Choose a description from COLUMN B that matches a term in COLUMN A. Write only the letter (A–E) next to the question number (1.2.1–1.2.5) in the ANSWER BOOK.

COLUMN A		COLUMN B	
1.2.1	Stress	A	outer part of a section
1.2.2	Web	B	ability to resist bending
1.2.3	Bending resistance	C	part that joins two flanges in a section
1.2.4	Flange	D	applied force that tends to strain or deform a body
1.2.5	Loading	E	weight placed on something

(5 × 1) (5)

1.3 Give the purpose of nylon in a nyloc lock. (2)

1.4 Illustrate, with the aid of neat sketches, the differences between a channel back to back and a channel toe to toe. (2 + 2) (4)

1.5



FIGURE 1

Differentiate between the threads of the two fasteners on the left and the one on the right as shown in FIGURE 1. (2)

1.6 Indicate whether the following statements are TRUE or FALSE by writing only 'True' or 'False' next to the question number (1.6.1–1.6.5) in the ANSWER BOOK.

1.6.1 Sheet metal consists of thick metal pieces.

1.6.2 The thickness of sheet metal varies between foil and plates.

1.6.3 Plates are formed through a process called flat rolling.

1.6.4 Plate fittings may have holes for bolts.

1.6.5 Unidentifiable steel is assumed to have a yield stress of 200 MPa which is the lowest quality of steel.

(5 × 1) (5)

Copyright reserved

1.7 List FIVE concrete structural components used in building construction. (5)

1.8 Give FOUR advantages of in-situ concrete. (4)

1.9 Give the advantages and disadvantages of precast slabs. (8)

1.10 Choose a description from COLUMN B that matches a term in COLUMN A. Write only the letter (A–C) next to the question number (1.10.1–1.10.3) in the ANSWER BOOK.

COLUMN A		COLUMN B	
1.10.1	Carbonation	A	Occurs in the presence of chloride, which will attack and completely destroy the protective oxide layer on the steel
1.10.2	Chloride contamination	B	Caused by the reaction between carbon dioxide in the atmosphere and water to form carbonic acid
1.10.3	Patch-accelerated corrosion	C	Occurs when old concrete is patched with new concrete

(3 × 1) (3)

[40]

QUESTION 2: STRUCTURAL STEELWORK AND REINFORCED CONCRETE

2.1

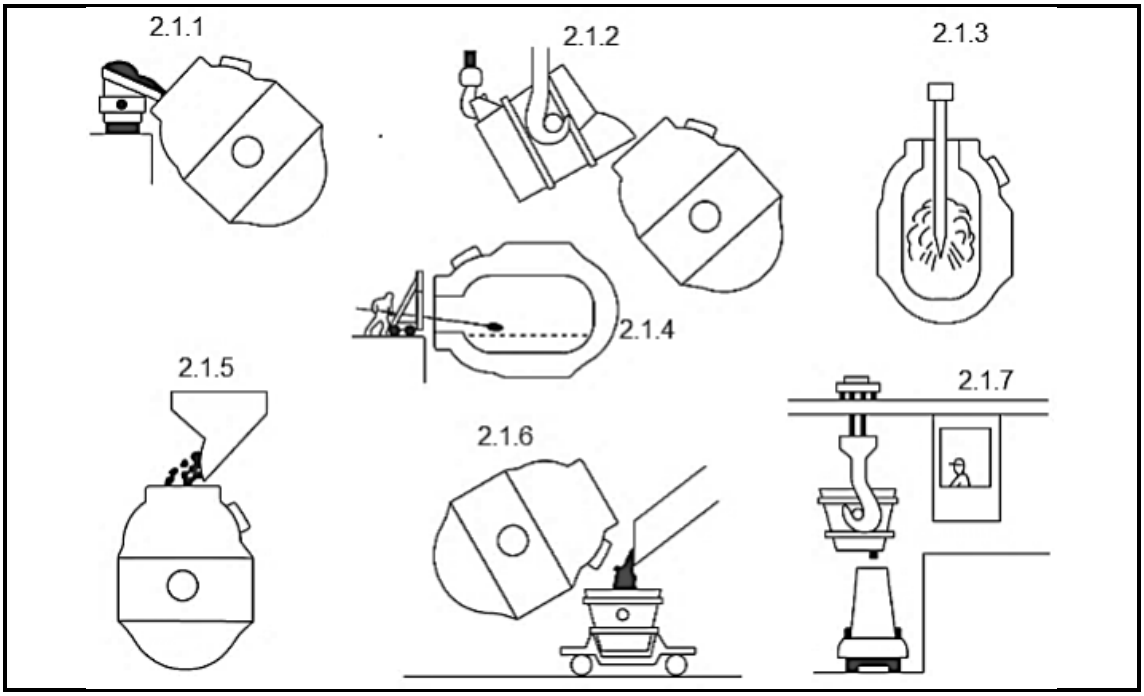

Name the different stages of manufacturing steel using a Bessemer convertor by writing only the answer next to the question number (2.1.1–2.1.7) in the ANSWER BOOK. (7 × 1) (7)

2.2 Define each of the following terms:

2.2.1 Alloy

2.2.2 Rolling

2.2.3 Ore

2.2.4 Casting

2.2.5 Forging

(5 × 2) (10)

2.3 Complete the following paragraph by choosing a word or words from the list below. Write only the answer next to the question number (2.3.1–2.3.5) in the ANSWER BOOK.

fabrication; cold rolled; production; temperature; hot rolled

There are two types of structural members, namely (2.3.1) … and (2.3.2) … The difference between the two types is due to the (2.3.3) … methods employed in the (2.3.4) … of each type, specifically the (2.3.5) … at which the profiles are processed. (5 × 1) (5)

2.4 Explain why it is beneficial to use extenders in concrete. (2)

2.5 What determines the fire resistance of concrete? (5)

2.6 Give TWO instances where steel cannot be used to reinforce concrete. (2)

2.7 Explain the role of steel in concrete. (2)

2.8 Name the THREE crucial roleplayers who use a bending schedule as a way of communication. (3)

2.9 Define each of the following terms:

2.9.1 Corrosion

2.9.2 Electrochemical reaction

(2 × 2) (4)

[40]

QUESTION 3: BOLTS IN STRUCTURAL STEELWORK

3.1 Choose a description from COLUMN B that matches a term in COLUMN A. Write only the letter (A–F) next to the question number (3.1.1–3.1.6) in the ANSWER BOOK.

COLUMN A		COLUMN B	
3.1.1	Hex	A	Nut with a nylon insert
3.1.2	Cap	B	Six-sided nut
3.1.3	Wing	C	Nut with a domed top over the end of the fastener
3.1.4	Square	D	Nut with wings for hand tightening
3.1.5	Coupling	E	Four-sided nut
3.1.6	Nylon-insert lock	F	Long nuts used to connect threaded rods together

(6 × 1) (6)

3.2



FIGURE 2

Calculate the ultimate and yield strengths of the bolt in FIGURE 2. (4)
[10]

QUESTION 4: WELDING SYMBOLS AND JOINTS

4.1 Various options are given as possible answers to the following questions. Choose the answer and write only the letter (A–D) next to the question number (4.1.1–4.1.10) in the ANSWER BOOK.

4.1.1 Weld symbol with no arrow-side or other-side significance:

A Projection or seam weld
B Back or backing weld
C Surface or groove weld
D Flash and upset weld

4.1.2 A back or backing weld is a type of … weld.

A groove
B resistance
C arc and gas
D upset

4.1.3 A welding drawing is a special type of … drawing.

A symbol
B perspective
C assembly
D isometric

4.1.4 Welding is often used for large structures that are difficult or impossible to fabricate entirely in a shop.

A True
B False

4.1.5 Groove weld size is usually specified on the welding symbol.

A True
B False

4.1.6 A fillet weld may be termed as a … weld.

A mitre
B concave
C convex
D All the above

4.1.7 Which ONE of the following is a basic type of welded joint?

A T-joint
B Rear joint
C Angle joint
D Groove joint

(7 × 1) (7)

4.2 Differentiate between a *joint* and a *weld*. (3)

[10]

TOTAL: 100

Copyright reserved