higher education & training

Department:
Higher Education and Training
REPUBLIC OF SOUTH AFRICA

MARKING GUIDELINE

NATIONAL CERTIFICATE (VOCATIONAL)

CARPENTRY AND ROOF WORK
NQF LEVEL 4

11 March 2020

This marking guideline consists of 5 pages.

Copyright reserved

QUESTION 1

1.1
- A geyser installed on the roof quickly loses temperature during cold weather.
- A geyser inside the roof void is less likely to be stolen or damaged by harsh weather. (2)

1.2
- When a geyser is larger than 250 ℓ
- If the trusses the geyser will rest on span more than 8 m. (2)

1.3

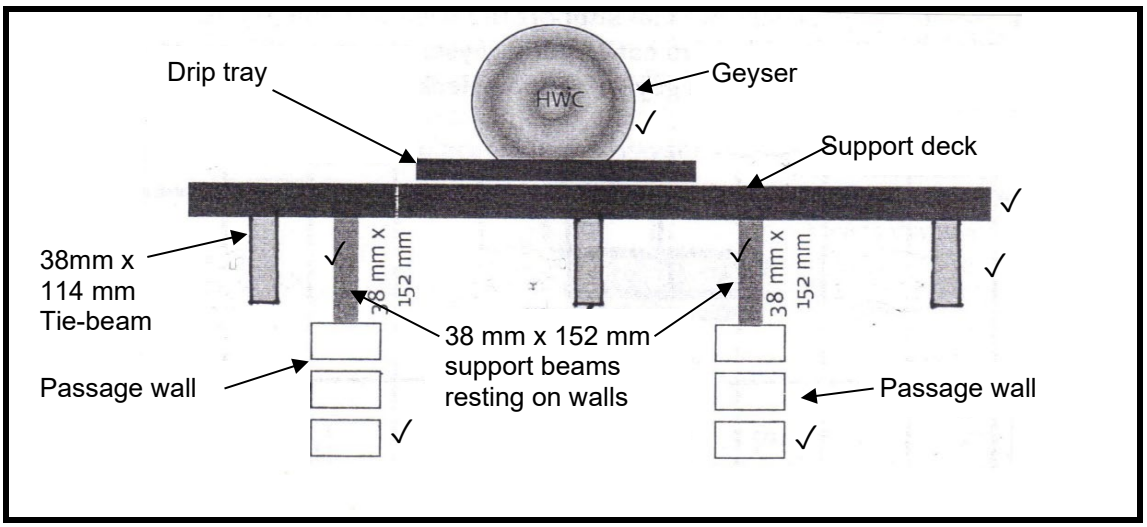

Labelling (Any 4 x 1)
Drawing (7 x 1) (11)
[15]

QUESTION 2

2.1
- Longitudinal brandering runs at 90° to the truss✓ and is used to level✓ the ceiling boards attached to it.
- Cross brandering runs at 90° to the longitudinal brandering✓ and is nailed at an angle between the longitudinal brandering.✓ (2 × 2) (4)

2.2
2.2.3
2.2.2
2.2.5
2.2.4
2.2.1

(5 × 1) (5)

2.3
2.3.1 False
2.3.2 False
2.3.3 True
2.3.4 True
2.3.5 False

(5 × 1) (5)

2.4
- Use timber cover strips
- Use cornice moulding
- Use H-section metal strips (3)

2.5
- A trestle scaffold
- An independent scaffold (2)

2.6
2.6.1 above the passage
2.6.2 250 litre
2.6.3 2 mm
2.6.4 trimmers
2.6.5 mitred

(5 × 1) (5)

2.7
- Polyester✓– melts under intense heat✓
- Fibreglass✓ – irritates skin✓
- Borax paper✓ – retains water✓ (6)

[30]

QUESTION 3

3.1

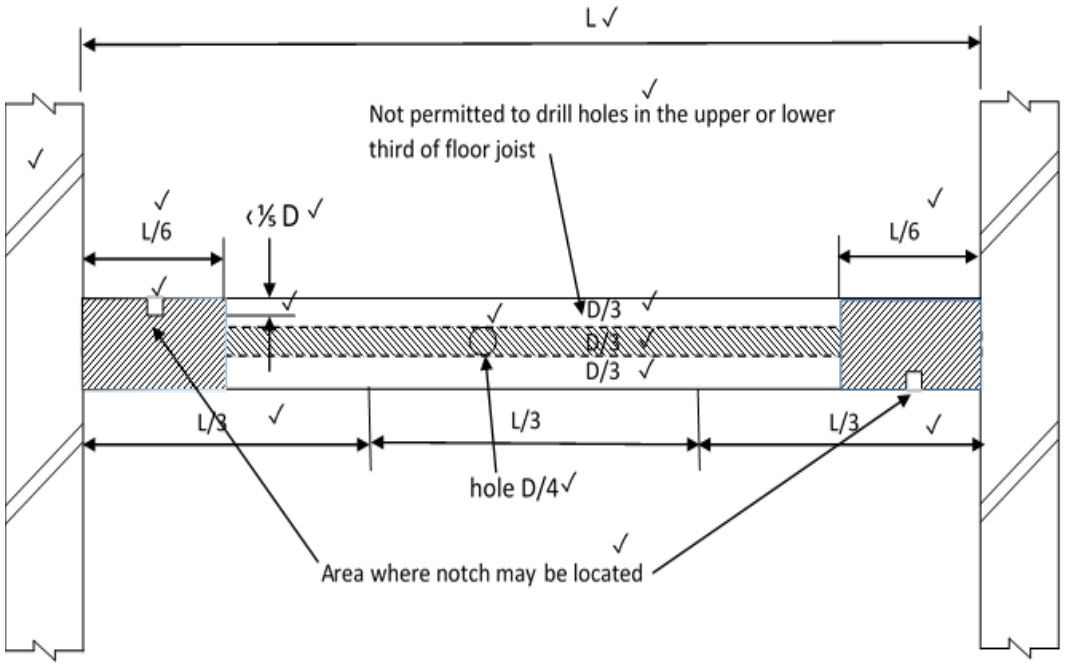

(15)

3.2
3.2.1 heat
3.2.2 mezzanine
3.2.3 material
3.2.4 bearer
3.2.5 upper

(5 × 1) (5)

[20]

Copyright reserved

QUESTION 4

4.1 4.1.1 A hollow core or flush door
4.1.2 A panel door
4.1.3 A casement or French door
4.1.4 A fire door
4.1.5 A batten door

(Any applicable 5 × 1) (5)

4.2 An interior doorframe has no sill whereas an exterior doorframe has one. (1)

4.3
- A roofing square
- A spirit level
- A plumb bob (3)

4.4 4.4.1 Brass hinges are not prone to rust easily. (1)

4.4.2
- The gap will allow for swelling of the door
- and also gives a neat appearance. (2)

4.4.3
- Doors can open from the right or left side.
- The bevel on the latch bolt must always face in the direction that the door closes. (2)

4.4.4
- It reduces the risk of the door becoming hinge-bound.
- It prevents the door from jamming. (2)

4.5 1,2 m or 1 200 mm ✓ from the bottom of the door ✓ (2)

4.6
- 2 032 mm high
- 813 mm wide (2)

[20]

QUESTION 5

5.1 Cupboards built in a workshop or factory as freestanding units✓ then transported to the site where they are installed.✓ (2)

5.2
- Corner brackets
- Mitred cleats (2)

5.3
- Apply pressure on top of the skirting to push it down.
- Nail the skirting directly to the wall. (2)

5.4 A quadrant is a length of moulded timber resembling a quarter of a circle✓ which is pinned to the bottom side of the skirting to hide any gap between the floor and skirting.✓ (2)

Copyright reserved

5.5 Chipboard is porous✓ and will absorb water and rot and lose its shape.✓ (2)

5.6
- Veneer is glued to the edges.
- Timber beading/moulding is nailed to the edges. (2)

5.7
- Masonite
- Plywood (2)

5.8 To copy the shape of irregular walls (1)

[15]

TOTAL: 100

Copyright reserved