higher education & training

Department:
Higher Education and Training
REPUBLIC OF SOUTH AFRICA

MARKING GUIDELINE

NATIONAL CERTIFICATE (VOCATIONAL)

AUTOMOTIVE REPAIR AND MAINTENANCE
NQF LEVEL 3

7 December 2020

This marking guideline consists of 5 pages.

Copyright reserved

QUESTION 1

1.1
- Antiknock agents
- Oxidation inhibitors
- Metal deactivators
- Antirust agents
- Anti-icing agents
- Detergents
- Phosphorous compounds
- Dye/colouring (Any relevant 5 × 1) (5)

1.2
- Warm air
- Cooling agent reaching operating temperature
- Electrical heating element (3)

1.3
- Float needle is stuck in the open position.
- Float needle is worn or leaks.
- Float level is set too high.
- Fuel pump is too strong without pressure relieve. (Any relevant 2 × 1) (2)

1.4
1 Coil spring
2 Upper and lower coil spring locator
3 Top wishbone
4 Top wishbone bushes
5 Top ball joint
6 Bottom wishbone
7 Bottom wishbone bushes
8 Bottom ball joint (8)

1.5

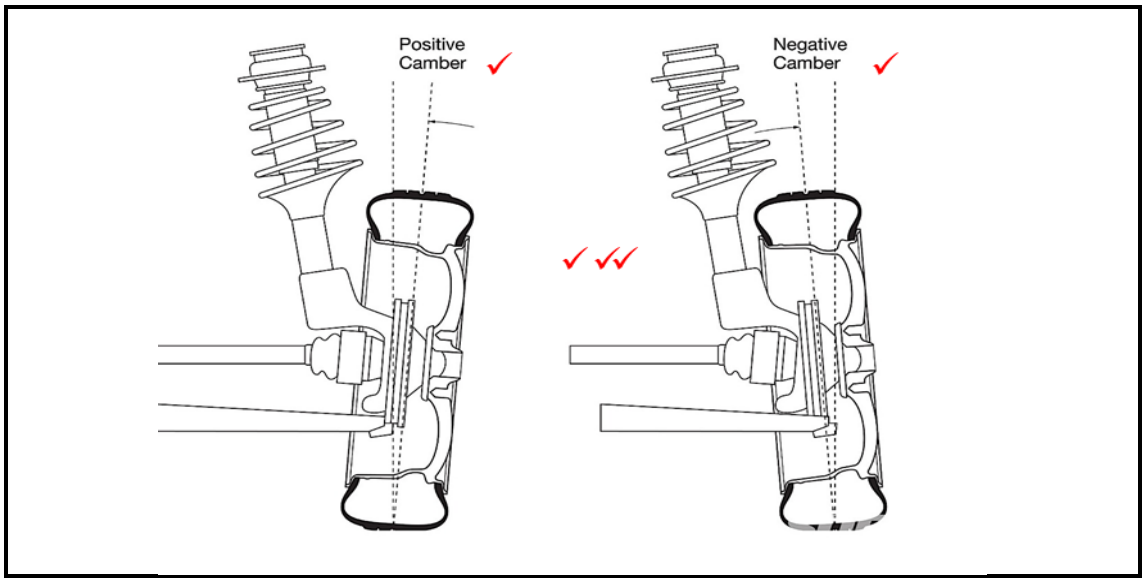

(Sketches) (3)
(Labels) (2)

1.6
- Rim width calliper
- Wheel balance weight hammer (2)

[25]

QUESTION 2

2.1
- It prevents excessive tyre wear.
- It improves the road-holding ability of the vehicle.
- It prevents hard steering of the vehicle.
- It prevents the vehicle from wondering on the road.
- It provides the vehicle's relative stability.
- It determines if the wheel will toe in or toe out. (6)

2.2
- Prepare the working area by fitting fender covers to the vehicle and clearing the work area.
- Select the appropriate tools for the task.
- First remove the negative battery terminal to prevent a short circuit.
- Remove the electrical cables from the starter motor.
- Remove the locating bolts that attach the starter motor to the engine.
- Remove the starter unit from the engine. (6)

2.3
A Plunger
B Solenoid
C Commutator
D Brushes
E Field coils and housing
F Armature
G Pinion/Bendix
H Lever fork (8)

2.4 The regulator adjusts the load on the system✓ in order to keep the voltage at the correct value✓ for the battery to be charged.✓ (3)

2.5 The rectifier's function is to turn the alternating current (AC)✓ to a direct current (DC).✓ (2)

[25]

QUESTION 3

3.1
- The function of the compensator is to allow each wheel actuator
- to receive an equal pull force from the handbrake lever,
- irrespective of the lining, joint or cable wear. (3)

3.2 3.2.1 No brakes
- Broken hose or other leak
- Air in the system
- Low fluid level in brake system
- Seal or piston damage (Any 2 × 1) (2)

3.2.2 Spongy pedal
- Air in the system
- Shoes not centred in drum
- Soft brake hose/swells
- Brake drum cracked/worn too thin
- Incorrect brake linings (Any 2 × 1) (2)

3.2.3 Hard pedal
- Linings contaminated with grease or brake fluid
- Primary and secondary shoes reversed
- Brake linings binding
- Master or wheel cylinder frozen or seized (Any 2 × 1) (2)

3.2.4 Brakes grab or lock
- Grease or brake fluid on lining or pads
- Lining loose on shoe
- Loose wheel bearing
- Sand or dirt in brake shoe (Any 2 × 1) (2)

3.2.5 Brakes pull to one side
- One-wheel grabbing
- Shoes not centred or adjusted properly
- Uneven tyre pressure
- Different linings on one side
- Shoes reversed on one side (Any 2 × 1) (2)

3.3 3.3.1 Primary circuit
- Battery
- Ignition switch
- Ignition coil
- Condenser
- Points

3.3.2 Secondary circuit
- Battery
- Ignition switch
- Ignition coil
- Rotor arm in distributor
- HT leads
- Spark plugs (Any 5 × 1) (2 × 5) (10)

3.4 Start by performing a cylinder compression test. (1 × 2) (2)

[25]

QUESTION 4

4.1
- Wear the appropriate PPE for the workshop task at hand.
- When disconnecting the fuel lines, be careful not to let fuel spill.
- Block open fuel lines to prevent contamination.
- Block open fuel lines to prevent spillage causing fire hazards.
- Consult the workshop manual for electrical removal procedures.
- Drain oil and coolant in the appropriate containers.
- Wipe all spillages immediately to prevent accidents and fire hazards.
- Use the correct tools for the correct tasks to prevent component damage.
- Only make use of soft blow hammers to loosen components that are stuck.

(Any 6 × 1) (6)

4.2
- The vehicle is tested for abnormal noises
- Proper functioning of the clutch and gearbox
- To determine proper performance of the engine
- Listening for any unusual driveline and train noises (4)

4.3
- Did you clean the piston ring grooves properly?
- Did you check that the piston rings are the correct size?
- Did you check the piston ring clearance in the piston grooves?
- Did you check the piston ring gap with the ring placed in the cylinder?
- Did you compare the readings with the manufacturer's specifications?
- Did you identify the piston ring markings for fitment?
- Did you make use of the piston ring expander to fit the rings?
- Did you fit the correct piston ring to the correct groove?
- Did you follow the same procedure for all the pistons? (Any 8 × 1) (8)

4.4
1 Crown wheel
2 Planetary gears
3 Pinion gear input shaft
4 Pinion gear
5 Right-hand side shaft
6 Sun gear/Side-shaft gear/Side gear
7 Left-hand side shaft (7)

[25]

TOTAL: 100

Copyright reserved