higher education & training

Department:
Higher Education and Training
REPUBLIC OF SOUTH AFRICA

NATIONAL CERTIFICATE (VOCATIONAL)

AUTOMOTIVE REPAIR AND MAINTENANCE
NQF LEVEL 3

(6021033)

21 November 2018 (X-Paper)
09:00–12:00

This question paper consists of 7 pages.

NCV

Copyright reserved

TIME: 3 HOURS
MARKS: 100

INSTRUCTIONS AND INFORMATION

1. Answer ALL the questions.
2. Read ALL the questions carefully.
3. Number the answers according to the numbering system used in this question paper.
4. ALL sketches must be neat and in proportion.
5. ALL the work that you do not want to be marked must be clearly crossed out.
6. Start each question on a new page.
7. The paper contains four questions and the mark allocation is equivalent to a percentage.
8. Write neatly and legibly.

Copyright reserved

QUESTION 1

1.1 Choose a description from COLUMN B that matches an item in COLUMN A. Write only the letter (A–F) next to the question number (1.1.1–1.1.5) in the ANSWER BOOK.

COLUMN A		COLUMN B	
1.1.1	Air flow meter	A	senses whether the air/fuel mixture is too rich or too lean
1.1.2	Wheel weight hammer	B	narrowing of the carburettor air horn or barrel
1.1.3	Oxygen sensor	C	supplies lean air/fuel mixture
1.1.4	Venturi	D	tool to fit wheel weights
1.1.5	Choke system	E	provides a rich air/fuel mixture for cold engines
		F	senses the volume of air in the intake

(5 × 1) (5)

1.2 Briefly explain the purpose of glow plugs in diesel engines. (2)

1.3 List THREE tests that can be performed on a diesel injector. (3)

1.4 Name the task that is performed to remove air from the brake system. (1)

1.5 Give TWO possible causes for each of the following brake conditions.

1.5.1 Dragging brakes.

1.5.2 Brakes pulling to one side.

(2 × 2) (4)

1.6 List FIVE steps that one should follow to remove a wheel cylinder from a vehicle with drum brakes. (5)

1.7 List THREE specifications required when overhauling a differential. (3)

Copyright reserved

1.8 Use the picture of the section of a crown wheel in FIGURE 1 below to answer the questions.

1.8.1 Identify the tooth contact patterns that are labelled B, C and D. (3)

1.8.2 Explain how contact pattern A should be corrected.

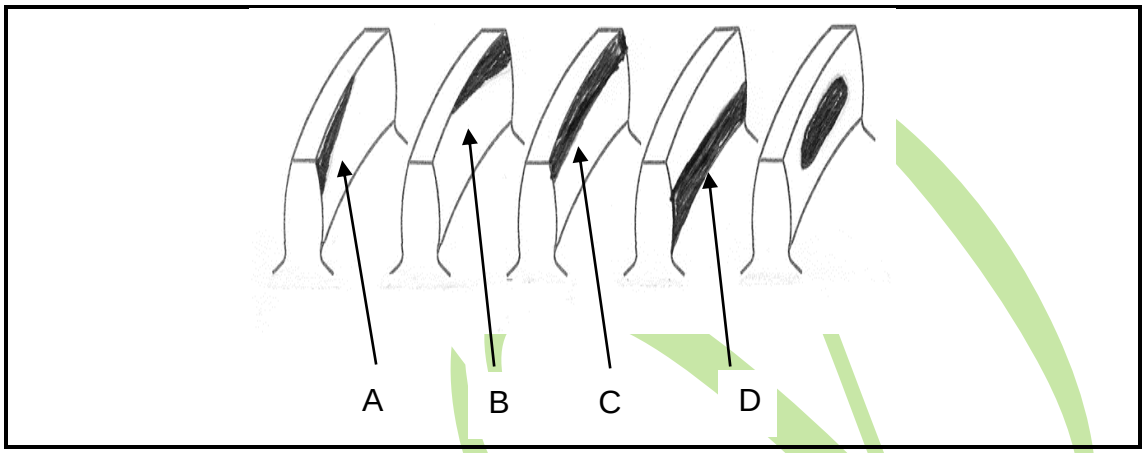

FIGURE 1

(2)
[28]

QUESTION 2

2.1 Incorrect wheel alignment has a negative effect on the vehicle.

Make a simple sketch of a wheel and strut assembly that indicates negative camber. (3)

2.2 List THREE negative effects of equal lengths of upper and lower wishbones on vehicle suspension. (3)

2.3 List TWO faults that can be identified when performing a general inspection on the suspension system of a vehicle. (2)

2.4 Describe THREE ways in which the suspension system contributes to the driving comfort of a vehicle. (3)

2.5 Name TWO pre-checks that need to be done before the wheel alignment of a vehicle can be checked and adjusted. (2)

2.6 List FOUR inspections that need to be carried out on the rim and tyre before the wheel van be balanced. (4)

2.7 Name TWO types of balancing that affect the true running of a wheel. (2)

2.8 Describe FOUR effects that unbalanced front wheels have on a vehicle. (4)
[23]

Copyright reserved

QUESTION 3

3.1 Use the picture in FIGURE 2 below to answer the following questions.

3.1.1 Identify the TWO rotating parts of the starter motor. (2)

3.1.2 Identify the parts that are labelled A, B, C and D.

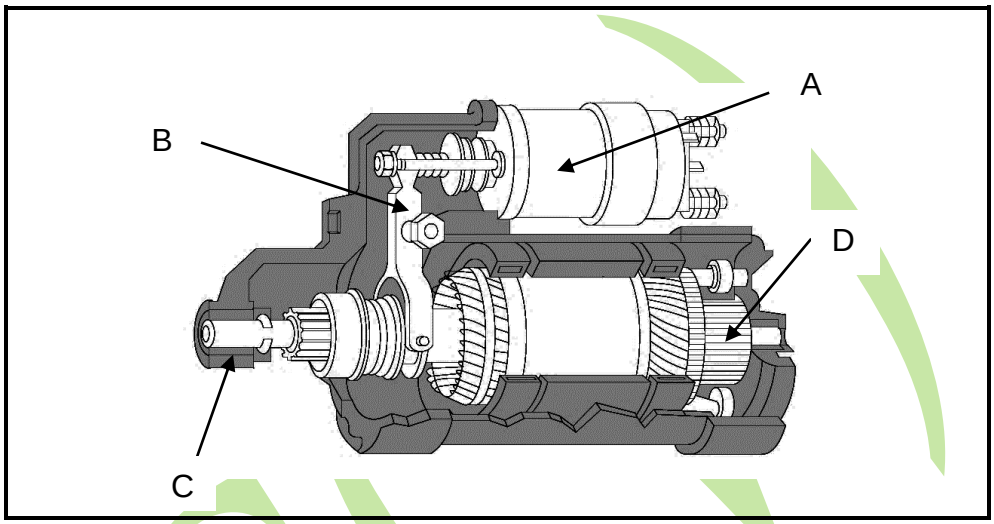

FIGURE 2 (4)

3.2 Give TWO reasons why the pinion would be pulled in by the solenoid but the starter would not crank the engine. (2)

3.3 While driving a vehicle, the battery light on the instrument panel lights up.

Give any TWO possible reasons why this could happen. (2)

3.4 List FIVE steps to follow when adjusting the v-belt tension. (5)

3.5 Name the part of the alternator that is identified as the output windings. (1)

3.6 Identify the TWO types of distributor advance systems used in conventional ignition systems. (2)

3.7 Name the tool that is used to perform the following tasks.

3.7.1 To test the plug leads.

3.7.2 To set the spark plug gap.

3.7.3 To check the ignition timing.

3.7.4 To test the vacuum advance unit.

(4 × 1) (4)

3.8 Name TWO components that form part of the primary circuit in a conventional ignition system. (2)

[24]

Copyright reserved

QUESTION 4

4.1 Explain how the parts labelled B and C in FIGURE 3 below work together to produce turning motion for the wheels. Include other parts that are involved in this process. (3)

4.2 Name the eccentric section of the camshaft that opens the valves. (1)

4.3 Identify THREE condition checks one can do on part C to assess whether it is still useable.

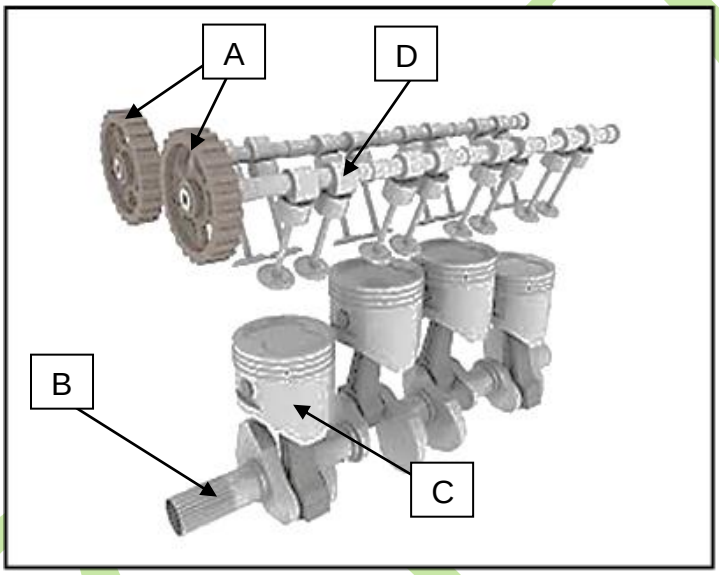

FIGURE 3 (3)

4.4 List the steps to follow when doing a compression test on a warmed-up engine. (5)

4.5 Incorrect storage of engines may result in costly repairs.

Explain FIVE precautions to adhere to when storing an engine. (5)

4.6 Name the tool or equipment one would need to perform the following tasks.

4.6.1 To measure the crank journal for ovality

4.6.2 To measure the cylinder head for warpage

4.6.3 To measure the oil clearance at the crankshaft bearings

(3 × 1) (3)

4.7 List FIVE inspections that one would perform on a vehicle which was road tested after having an engine fitted. (5)

[25]

TOTAL: 100

Copyright reserved