higher education & training

Department:
Higher Education and Training
REPUBLIC OF SOUTH AFRICA

NATIONAL CERTIFICATE (VOCATIONAL)

AUTOMOTIVE REPAIR AND MAINTENANCE
NQF LEVEL 3

(6021033)

10 March 2020 (X-paper)
09:00–12:00

This question paper consists of 7 pages.

365Q1S2010

Copyright reserved

TIME: 3 HOURS
MARKS: 100

INSTRUCTIONS AND INFORMATION

1. Answer all the questions.
2. Read all the questions carefully.
3. Number the answers, according to the numbering system used in this question paper.
4. All sketches must be neat and in proportion and can be done in pencil.
5. Start each question on a new page.
6. Use only a blue or black pen.
7. All work you do not want to be marked must be clearly crossed out.
8. Write neatly and legibly.

Copyright reserved

QUESTION 1

1.1 Choose a description from COLUMN B that matches an item in COLUMN A. Write only the letter (A–K) next to the question number (1.1.1–1.1.10) in the ANSWER BOOK.

COLUMN A		COLUMN B	
1.1.1	Pull-in coil	A	a part of the alternator
1.1.2	Stator	B	warped discs or drums
1.1.3	Synchro unit	C	transfers the spark from the coil HT cables and plug cables
1.1.4	Collets	D	determines the amount of suction in the intake manifold
1.1.5	MAP sensor		
1.1.6	Rotor arm	E	part of the starter motor
1.1.7	Label tags	F	part of a rear suspension system
1.1.8	Leaf spring	G	part of the gearbox selector mechanism
1.1.9	Brake pedal pulsation	H	could be found in an engine, gearbox or differential
1.1.10	Thrust washers	I	locks the valve spring in place
		J	a type of tyre construction
		K	marking the wires before removing them

(10 × 1) (10)

1.2 Name TWO carburettor circuits that function while the throttle is in the open position. (2)

1.3 Name the additive that is added to fuel to achieve each of the following requirements:

1.3.1 To keep the system parts such as the carburettor clean

1.3.2 To prevent the freezing of fuel and system parts

1.3.3 To prevent the formation of gum during the storage period

(3 × 1) (3)

1.4 Working with flammable liquids can be very dangerous.

State TWO safety procedures to adhere to when working with them. (2)

1.5 Briefly explain why a glow plug is used on diesel engines. (2)

[19]

Copyright reserved

QUESTION 2

2.1 Briefly explain the function of the following parts of the alternator:

2.1.1 The regulator

2.1.2 The rectifier

(2 × 1) (2)

2.2 Explain how a slack V-belt can have a negative effect on the battery condition. (3)

2.3 Name the alternator parts in FIGURE 1. Write only the answer next to the letter (A and B) in the ANSWER BOOK.

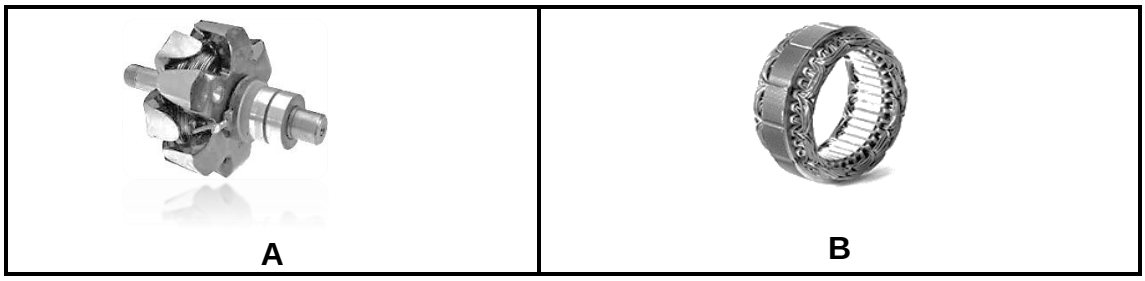

FIGURE 1 (2)

2.4 Indicate whether the following statements are TRUE or FALSE by writing only 'True' or 'False' next to the question number (2.4.1–2.4.7) in the ANSWER BOOK.

2.4.1 The starting current draw is measured with an ohmmeter.

2.4.2 First remove the positive terminal then the negative terminal before working on the starter motor.

2.4.3 The field coils are sometimes permanent magnets.

2.4.4 Reduction starters produce more torque to crank bigger engines.

2.4.5 Current from the brushes flows through the field coils to the slip rings.

2.4.6 One function of the solenoid is to transfer battery voltage to the brushes.

2.4.7 The armatures mesh with the ring-gear to crank the engine.

(7 × 1) (7)

2.5 Name FOUR parts of the primary ignition circuits of the conventional ignition system that should be included in the inspection of the system. (4)

2.6 Describe how the ignition timing is advanced during light-load acceleration. (3)

[21]

QUESTION 3

3.1 State THREE effects that a faulty MacPherson strut could have on the tyre-wear pattern. (3)

3.2 State TWO functions of each of the following suspension components:

3.2.1 The control arms

3.2.2 The leaf springs

(2 × 2) (4)

3.3 Discuss how understeering could affect the control of a vehicle. (2)

3.4 Name the wheel alignment condition of the vehicle in FIGURE 2. (1)

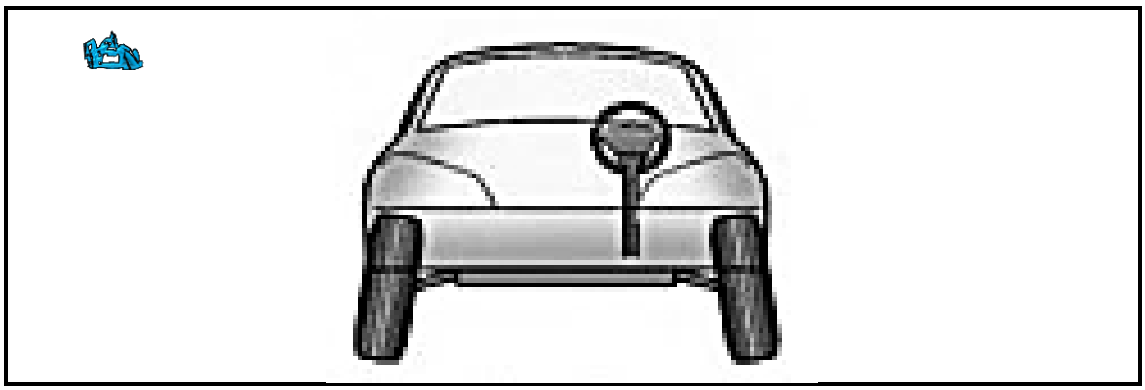

FIGURE 2

3.5 Name the wheel alignment condition where the strut is tilted forwards or backwards. (1)

3.6 State THREE inspections to be done on a tyre before the wheel can be balanced. (3)

3.7 Describe THREE symptoms or effects that an unbalanced wheel could have on a motor vehicle. (3)

3.8 Name TWO tools required to perform the wheel balancing task. (2)

3.9 Name the types of wheel weights used when balancing mag rims and steel rims. (2)

[21]

QUESTION 4

4.1 Name the parts indicated of the brake system in FIGURE 3. Write only the answer next to the letter (A–E) in the ANSWER BOOK.

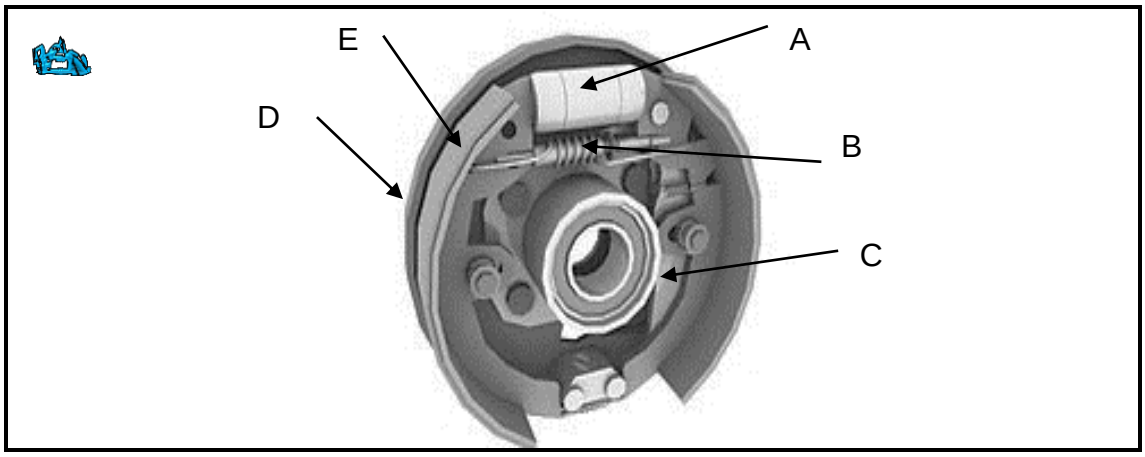

FIGURE 3 (5)

4.2 Give TWO possible causes for each of the following braking conditions when the brakes are applied:

4.2.1 Brake pedal fading

4.2.2 Brake pedal spongy

(2 × 2) (4)

4.3 Explain the power flow through a 4-speed transmission when third gear is selected. (5)

4.4 Briefly explain what is meant by *excessive heel contact* in final drives. (1)

[15]

QUESTION 5

5.1 Give THREE reasons for the engine's compression reading to be low. (3)

5.2 State TWO possible defects of the engine if the wet compression readings are much higher than the dry readings. (2)

5.3 Name THREE engine components where wear is measured on the inside diameter. (3)

5.4 Name TWO types of workshop equipment used to remove a motor vehicle engine. (2)

5.5 A crankshaft from a customer's vehicle needs to be machined and serviced before refitting it.

State TWO tasks the engineers might need to do on the crankshaft. (2)

5.6 Name FOUR measuring instruments that you would require to measure the engine components. (4)

5.7 Explain THREE tasks that should be done to prepare the engine when commissioned after safe storage. (3)

5.8 Name THREE inspections you would do when test driving for the functioning of a refitted engine. (3)

5.9 Name TWO methods that can be used to clean engine parts after removing them. (2)

[24]

TOTAL: 100

Copyright reserved