higher education & training

Department:
Higher Education and Training
REPUBLIC OF SOUTH AFRICA

NATIONAL CERTIFICATE (VOCATIONAL)

AUTOMOTIVE REPAIR AND MAINTENANCE
NQF LEVEL 3

(6021033)

7 December 2020 (X-paper)
09:00–12:00

This question paper consists of 5 pages.

323Q1N2007

Copyright reserved

TIME: 3 HOURS
MARKS: 100

INSTRUCTIONS AND INFORMATION

1. Answer all the questions.
2. Read all the questions carefully.
3. Number the answers according to the numbering system used in this question paper.
4. Sketches must be neat, clear and in good proportion.
5. Use only a black or blue pen.
6. Write neatly and legibly.

Copyright reserved

QUESTION 1

1.1 Name FIVE agents/additives that can be added to fuel to enhance it. (5)

1.2 Name THREE methods that are used to deactivate an automatic choke as the engine reaches operating temperature. (3)

1.3 Give TWO reasons why a carburettor would overfuel. (2)

1.4 Name the components indicated in FIGURE 1 by writing only the answer next to the number (1–8) in the ANSWER BOOK.

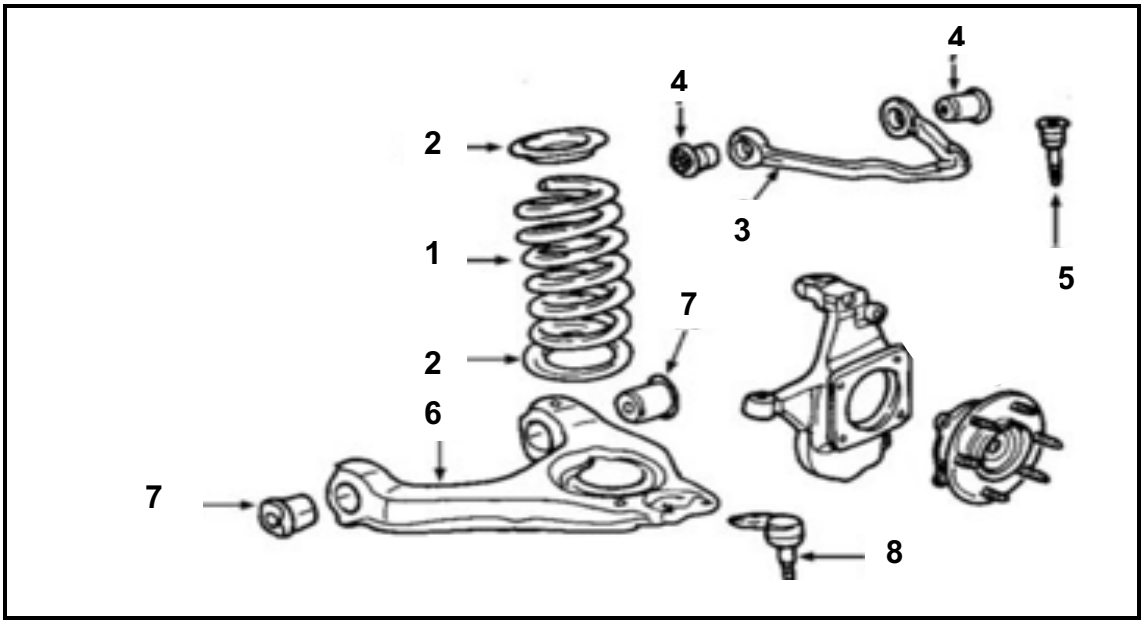

FIGURE 1 (8)

1.5 Make TWO neat, labelled sketches to show the difference between a *positive camber angle* and a *negative camber angle*. (5)

1.6 Name TWO special hand tools used when balancing wheels. (2)

[25]

QUESTION 2

2.1 State SIX benefits of maintaining a vehicle's wheel alignment. (6)

2.2 State the procedure to remove the starter motor from a vehicle, in SIX steps including safety measures. (6)

2.3 FIGURE 2 shows a starter motor. Name the components indicated by writing only the answer next to the letter (A–H) in the ANSWER BOOK.

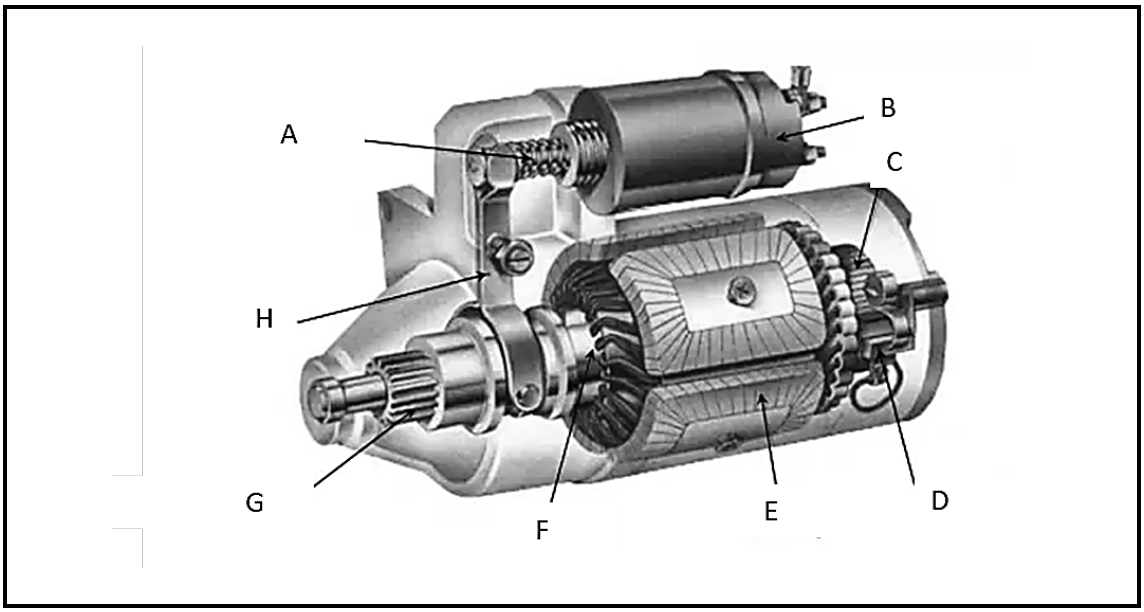

FIGURE 2 (8)

2.4 State the function of the regulator in an automotive alternator. (3)

2.5 State the function of the rectifier in an automotive alternator. (2)

[25]

QUESTION 3

3.1 Discuss the function of the compensator in the handbrake system. (3)

3.2 Complete the table below by writing TWO possible causes of each of the following brake problems next to the question number (3.2.1–3.2.5) in the ANSWER BOOK.

PROBLEM	POSSIBLE CAUSE
No brakes	3.2.1
Spongy pedal	3.2.2
Hard pedal	3.2.3
Brakes grab or lock	3.2.4
Brakes pull to one side	3.2.5

(5 × 2) (10)

Copyright reserved

3.3 Name FIVE components in the correct sequence, starting with the battery, of each of the following circuits of a conventional ignition system:

3.3.1 Primary circuit

3.3.2 Secondary circuit

(2 × 5) (10)

3.4 A customer complains of a misfire in her vehicle that persists even after she had the car serviced.

What type of test would you perform first to determine the cause of the misfire? (2)

[25]

QUESTION 4

4.1 State SIX safety precautions and procedures to adhere to when removing a vehicle engine. (6)

4.2 Why is it necessary to test-drive a vehicle after an engine installation? (4)

4.3 When overhauling an engine, a check list is used to make sure all the steps of assembly have been followed.

State EIGHT questions asked on the check list for the fitment of the piston rings. (8)

4.4 Name the components of the differential indicated in FIGURE 3, by writing only the answer next to the number (1–7) in the ANSWER BOOK.

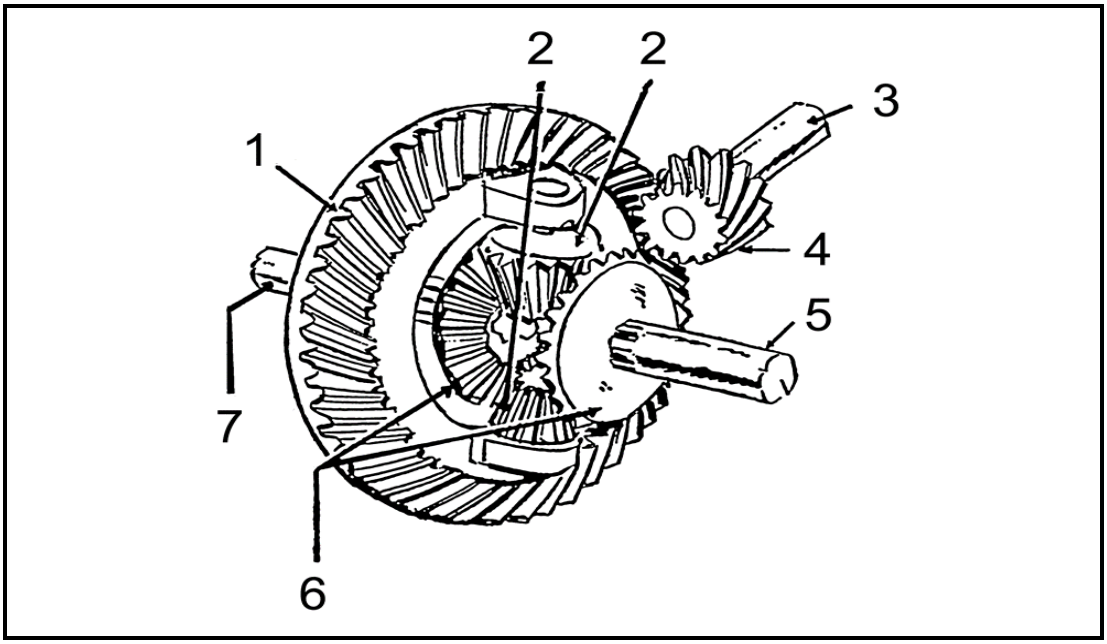

FIGURE 3

(7)

[25]

TOTAL: 100

Copyright reserved