higher education & training

Department:
Higher Education and Training
REPUBLIC OF SOUTH AFRICA

NASIENRIGLYN

NASIONALE SERTIFIKAAT (BEROEPSGERIG)

ARGITEKTONIESE GRAFIKA EN TEGNOLOGIE

(Eerste vraestel)

NKR VLAK 4

18 November 2020

Hierdie nasienriglyn bestaan uit 7 bladsye.

Kopiereg voorbehou

E2

ANSWER QUESTION 1

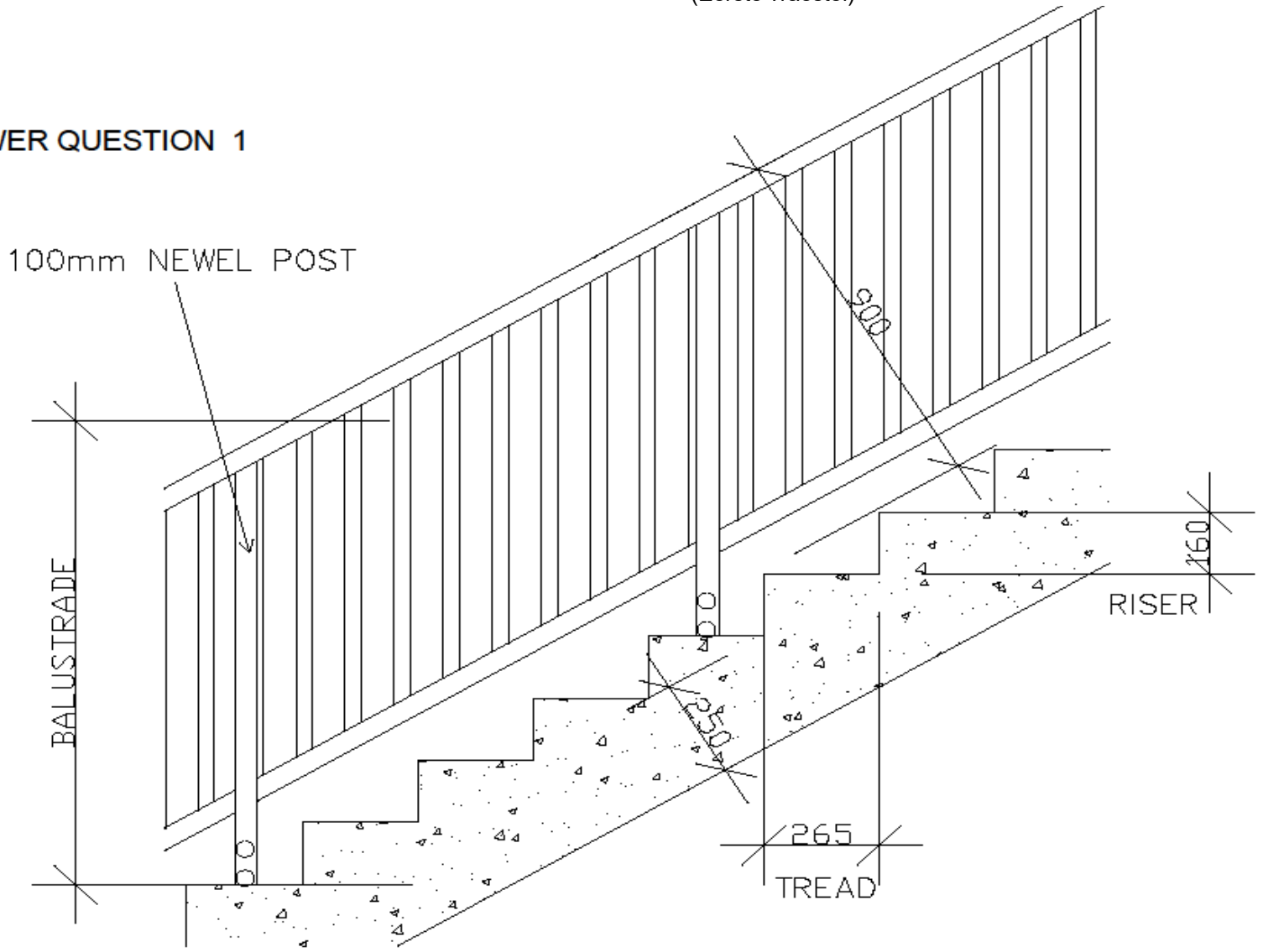

CONCRETE STAIR CASE DETAIL 1:10 (A3)

10 MARKS

STRUCTURAL ENGINEER TO BE APPOINTED BY OWNER TO CHECK AND APPROVE STRUCTURAL INTEGRITY OF THIS DESIGN , ADVISE ON ADVERSE SITE AND / OR SOIL CONDITIONS AND INSPECT WORKS PERIODICALLY AND ISSUE OF STRUCTURAL COMPLETION CERTIFICATE

ALL WORK TO BE IN ACCORDANCE WITH RELEVANT NATIONAL BUILDING REGULATIONS AND PERFORMED BY QUALIFIED AND REGISTERED CONTRACTOR TO MEET WITH ALL LOCAL MUNICIPAL REQIREMENTS. ALL DIMENSIONS TO BE CHECKED ON SITE BY CONTRACTOR PRIOR TO COMMENCING SITE WORKS

FIGURED DIMENSIONS TO BE TAKEN IN PREFERENCE TO SCALING DRAWINGS.

ALL RELEVANT DETAILS, LEVELS, DIMENSIONS TO BE CHECKED ON SITE BEFORE COMMENCEMENT OF WORK.

PROJECT	
PROJECT NO	
DESCRIPTION	
CLIENTS SIGNATURE	
SCALE	
DATE	
PAGE NO	–
REVISION	—
DRAWN BY	

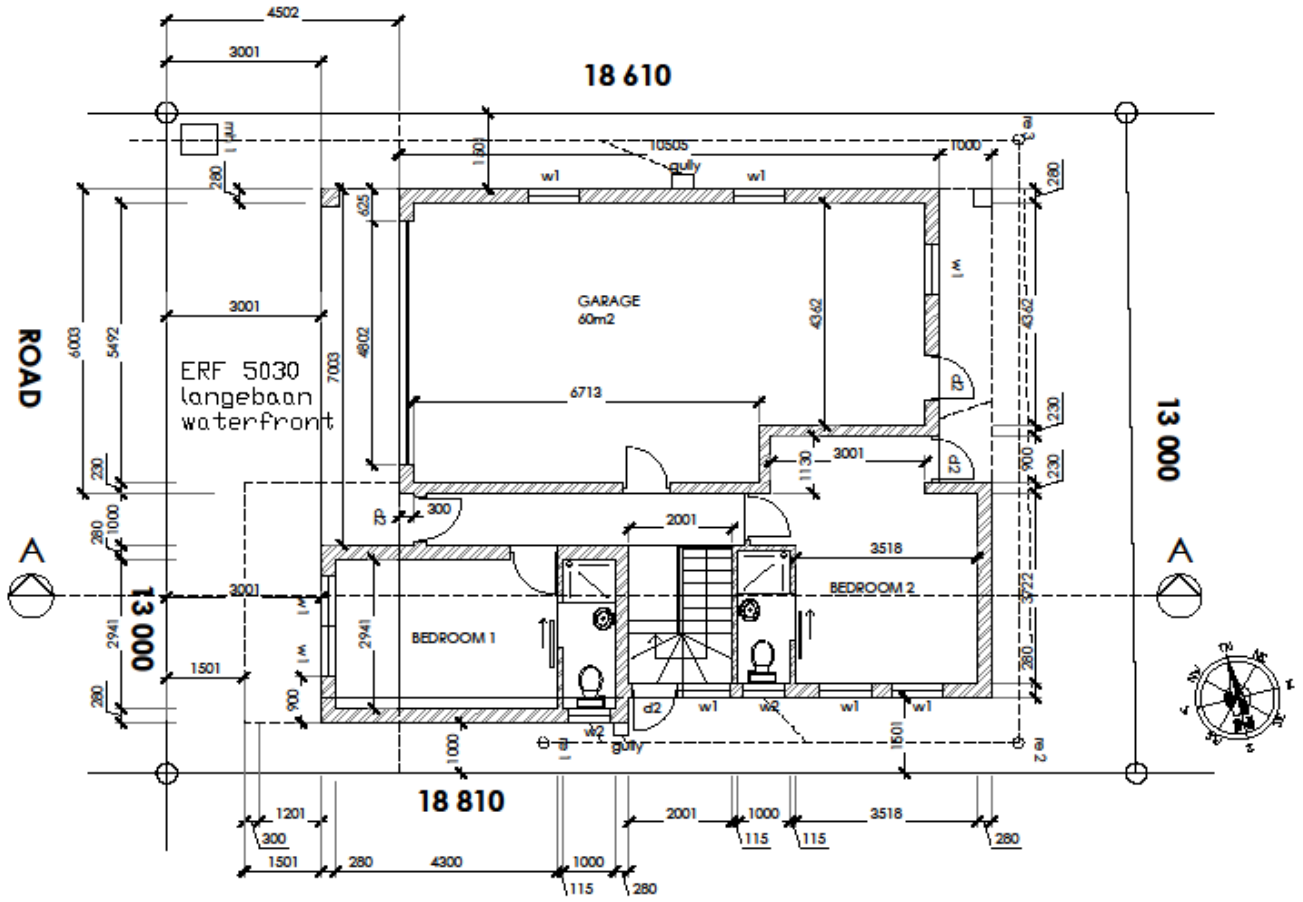

E2

STRUCTURAL ENGINEER TO BE APPOINTED BY OWNER TO CHECK AND APPROVE STRUCTURAL INTEGRITY OF THIS DESIGN , ADVISE ON ADVERSE SITE AND / OR SOIL CONDITIONS AND INSPECT WORKS PERIODICALLY AND ISSUE OF STRUCTURAL COMPLETION CERTIFICATE

ALL WORK TO BE IN ACCORDANCE WITH RELEVANT NATIONAL BUILDING REGULATIONS AND PERFORMED BY QUALIFIED AND REGISTERED CONTRACTOR TO MEET WITH ALL LOCAL MUNICIPAL REQIREMENTS. ALL DIMENSIONS TO BE CHECKED ON SITE BY CONTRACTOR PRIOR TO COMMENCING SITE WORKS

FIGURED DIMENSIONS TO BE TAKEN IN PREFERENCE TO SCALING DRAWINGS.

ALL RELEVANT DETAILS, LEVELS, DIMENSIONS TO BE CHECKED ON SITE BEFORE COMMENCEMENT OF WORK.

PROJECT	
PROJECT NO	
DESCRIPTION	
SCALE	
DATE	
PAGE NO	–
REVISION	—

LEVEL 1 PLAN LAYOUT 1:100 (A3)

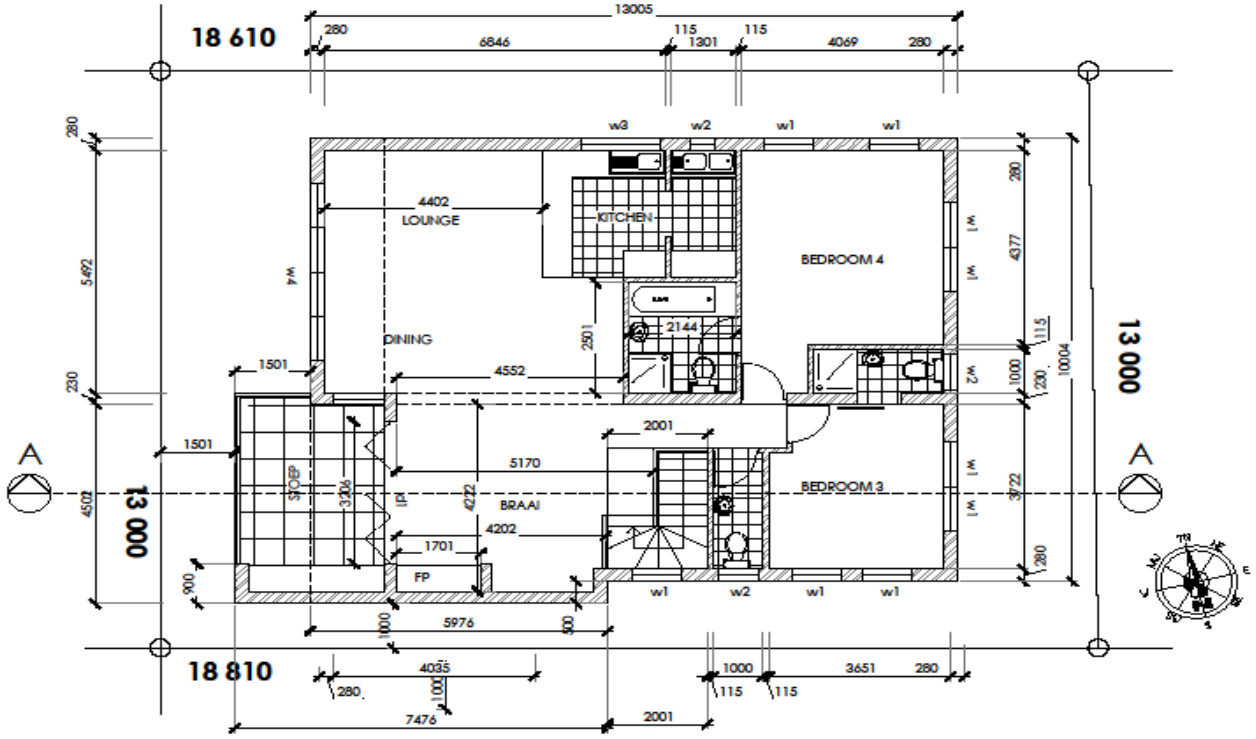

STRUCTURAL ENGINEER TO BE APPOINTED BY OWNER TO CHECK AND APPROVE STRUCTURAL INTEGRITY OF THIS DESIGN , ADVISE ON ADVERSE SITE AND / OR SOIL CONDITIONS AND INSPECT WORKS PERIODICALLY AND ISSUE OF STRUCTURAL COMPLETION CERTIFICATE

ALL WORK TO BE IN ACCORDANCE WITH RELEVANT NATIONAL BUILDING REGULATIONS AND PERFORMED BY QUALIFIED AND REGISTERED CONTRACTOR TO MEET WITH ALL LOCAL MUNICIPAL REQIREMENTS. ALL DIMENSIONS TO BE CHECKED ON SITE BY CONTRACTOR PRIOR TO COMMENCING SITE WORKS

FIGURED DIMENSIONS TO BE TAKEN IN PREFERENCE TO SCALING DRAWINGS.

ALL RELEVANT DETAILS,LEVELS,DIMENSIONS TO BE CHECKED ON SITE BEFORE COMMENCEMENT OF WORK.

E2

PROJECT	
PROJECT NO	
DESCRIPTION	
SCALE	
DATE	
PAGE NO	–
REVISION	—
DRAWN BY	

LEVEL 2 PLAN LAYOUT 1:100 (A3)

ANSWER QUESTION 2.2

20 MARKS

Kopiereg voorbehou

E2

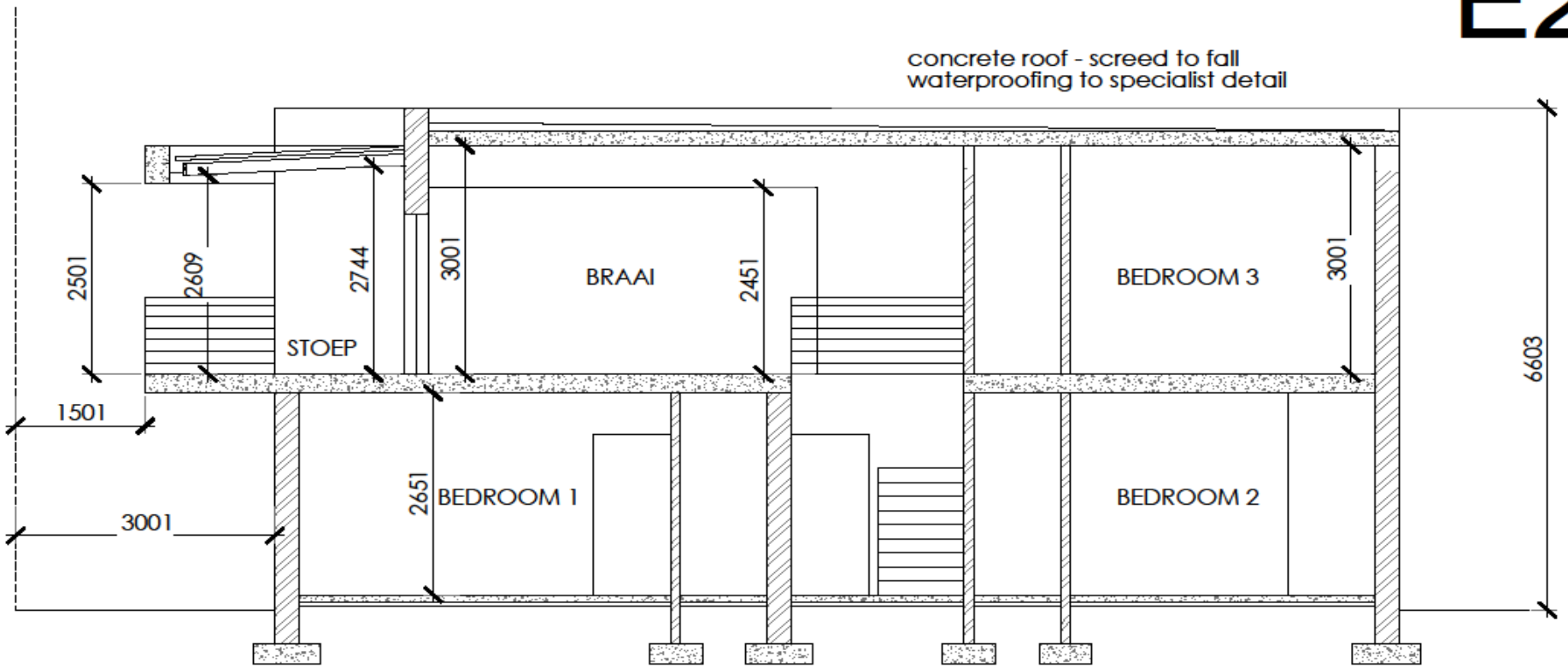

SECTION AA 1:50 (A3)

PROJECT	
PROJECT NO	
DESCRIPTION	
SCALE	
DATE	
PAGE NO	–
REVISION	—
DRAWN BY	

ANSWER QUESTION 3

20 MARKS

LEVEL 4 PAPER1 E2 2019/20

QUESTION 4
ANY 2 OF THE FOLLOWING ELEVATIONS

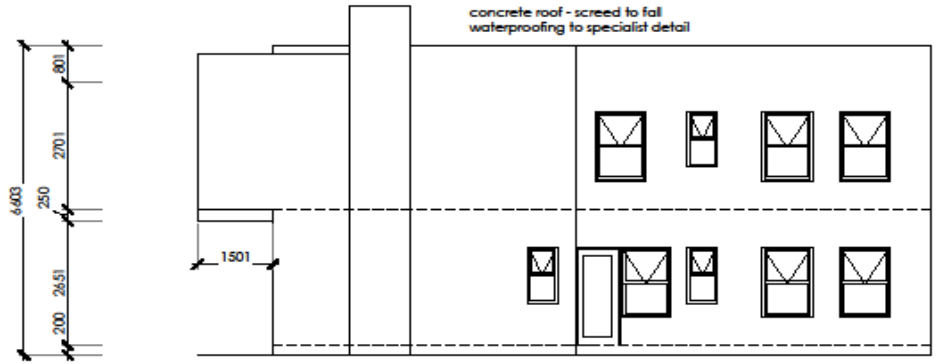

SOUTH ELEVATION

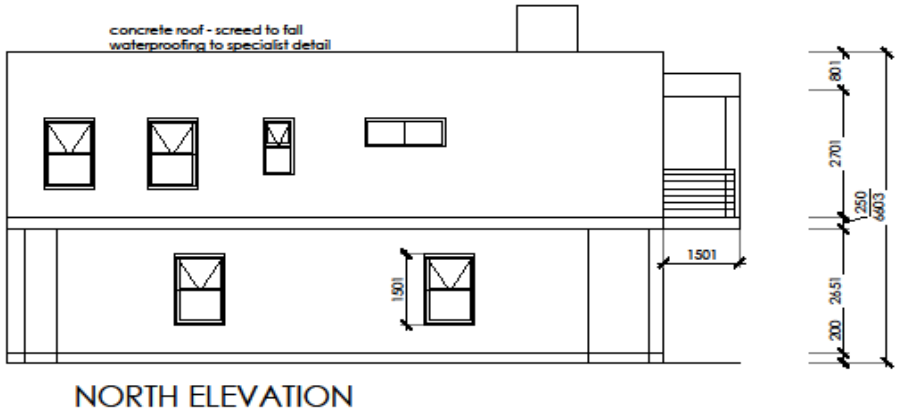

NORTH ELEVATION

ELEVATIONS 1:100 (A3)

15 MARKS

E2

STRUCTURAL ENGINEER TO BE APPOINTED BY OWNER TO CHECK AND APPROVE STRUCTURAL INTEGRITY OF THIS DESIGN , ADVISE ON ADVERSE SITE AND / OR SOIL CONDITIONS AND INSPECT WORKS PERIODICALLY AND ISSUE OF STRUCTURAL COMPLETION CERTIFICATE

ALL WORK TO BE IN ACCORDANCE WITH RELEVANT NATIONAL BUILDING REGULATIONS AND PERFORMED BY QUALIFIED AND REGISTERED CONTRACTOR TO MEET WITH ALL LOCAL MUNICIPAL REQIREMENTS. ALL DIMENSIONS TO BE CHECKED ON SITE BY CONTRACTOR PRIOR TO COMMENCING SITE WORKS

FIGURED DIMENSIONS TO BE TAKEN IN PREFERENCE TO SCALING DRAWINGS.

ALL RELEVANT DETAILS, LEVELS, DIMENSIONS TO BE CHECKED ON SITE BEFORE COMMENCEMENT OF WORK.

PROJECT	
PROJECT NO	
DESCRIPTION	
SCALE	
DATE	
PAGE NO	–
REVISION	–
DRAWN BY	

Kopiereg voorbehou

E2

QUESTION 4
ANY 2 OF THE FOLLOWING ELEVATIONS



WEST ELEVATION

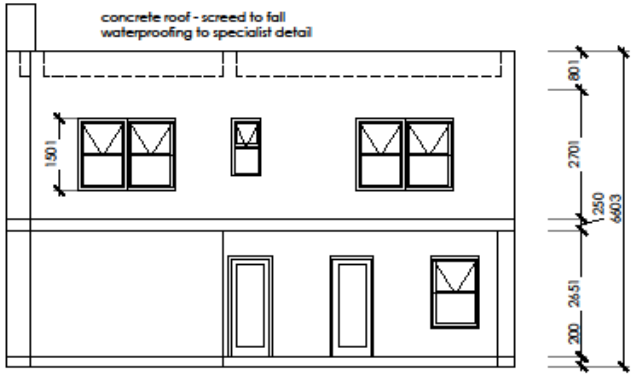

EAST ELEVATION

STRUCTURAL ENGINEER TO BE APPOINTED BY OWNER TO CHECK AND APPROVE STRUCTURAL INTEGRITY OF THIS DESIGN, ADVISE ON ADVERSE SITE AND / OR SOIL CONDITIONS AND INSPECT WORKS PERIODICALLY AND ISSUE OF STRUCTURAL COMPLETION CERTIFICATE

ALL WORK TO BE IN ACCORDANCE WITH RELEVANT NATIONAL BUILDING REGULATIONS AND PERFORMED BY QUALIFIED AND REGISTERED CONTRACTOR TO MEET WITH ALL LOCAL MUNICIPAL REQIREMENTS. ALL DIMENSIONS TO BE CHECKED ON SITE BY CONTRACTOR PRIOR TO COMMENCING SITE WORKS

FIGURED DIMENSIONS TO BE TAKEN IN PREFERENCE TO SCALING DRAWINGS.

ALL RELEVANT DETAILS, LEVELS, DIMENSIONS TO BE CHECKED ON SITE BEFORE COMMENCEMENT OF WORK.

PROJECT	
PROJECT NO	
DESCRIPTION	
SCALE	
DATE	
PAGE NO	–
REVISION	—
DRAWN BY	

ELEVATIONS 1:100 (A3)

15 MARKS

Kopiereg voorbehou