higher education & training

Department:
Higher Education and Training
REPUBLIC OF SOUTH AFRICA

NATIONAL CERTIFICATE (VOCATIONAL)

ARCHITECTURAL GRAPHICS AND TECHNOLOGY

(Second Paper)

NQF LEVEL 4

(12050644)

20 November 2019 (X-Paper)
09:00–12:00

This question paper consists of 6 pages and 1 diagram sheets.

Copyright reserved

TIME: 3 HOURS
MARKS: 100

INSTRUCTIONS AND INFORMATION

1. Answer ALL the questions.
2. Read ALL the questions carefully.
3. Number the answers according to the numbering system used in this question paper.
4. Start each section on a NEW page.
5. Use only a BLACK or BLUE pen.
6. Write neatly and legibly.

Copyright reserved

QUESTION 1

Various options are given as possible answers to the following questions. Choose the answer and write only the letter (A–D) next to the question number (1.1–1.10) in the ANSWER BOOK.

1.1 What does the abbreviation SACAP stand for?

A South African Council for the Architectural Profession
B South African Colleagues and Professionals
C South African Conservancy of Architectural People
D South African Controlled Allied People

1.2 What does the abbreviation NHBRC stand for?

A National House Benefactor Recreational Council
B National House Builders Regional Congress
C National Home Builders Registration Council
D National Home Body Regulation Conservancy

1.3 With which code of conduct are the South African National Building Regulations (NBR) aligned?

A SABS 14120
B SANS 3333
C SABS 62520
D SANS 10400

1.4 The terms *going*, *newels*, *stringer* and *nosing* are used to explain which of the following items?

A Stairs
B Roofing components
C Foundations
D Waterproofing products

1.5 The information on an SG diagram helps to determine the measurements of the …

A elevations.
B sections.
C site plan and erf information.
D detailed window schedule.

1.6 The abbreviation DPC in a wall stands for …

A drill paint concrete.
B drain pull cord.
C door plain casting.
D damp-proof course.

1.7 The person responsible for a site soil test:

A Soil-survey draughtsperson
B Geotechnical engineer
C Soil-test specialist
D Dirt specialist

1.8 How many ways are there to demonstrate compliance with the application of the South African National Building Regulations?

A 1
B 2
C 3
D 4

1.9 The professional responsible for working out the full cost of all the materials, labour and planning costs of a construction project:

A Accountant
B Quantity surveyor
C Land surveyor
D Engineer

1.10 The four tiers of architectural professionals in South Africa:

A Draughtsperson, technologist, senior technologist, architect
B Engineer, surveyor, draughtsperson, technician
C Land surveyor, geotechnician, builder, interior designer
D Designer, surveyor, engineer, geotechnician

(10 × 2) **[20]**

QUESTION 2: ADMINISTRATION, LEGISLATION AND REGULATIONS

2.1 State TWO ways to demonstrate compliance with the application of the South African National Building Regulations. (2 × 2) (4)

2.2 Explain the rationale behind building regulations in the construction industry. (4)
[8]

QUESTION 3: STAIRCASES AND LADDERS

3.1 What is the minimum width of a stair tread? (2)

3.2 What is a stringer? (2)

3.3 What are newel posts? (2)

3.4 Explain a *centre string*. (2)

3.5 What is a *going*? (2)

3.6 Name TWO types of nosings. (2 × 2) (4)

3.7 What is the minimum height of a balustrade? (2)

3.8 Name ONE type of staircase. (2)
[18]

QUESTION 4: BUILDING PLANS

4.1 Determine the percentage coverage of each of the following and show the calculations:

4.1.1
Erf size:	350 m^2
Area of level 1:	89 m^2
Area of level 2:	89 m^2
Area of garage:	26 m^2

4.1.2
Erf size:	457 m^2
Area of level 1:	120 m^2
Area of level 2:	120 m^2
Area of garage:	21 m^2

4.1.3
Erf size:	624 m^2
Area of single-level dwelling:	215 m^2
Area of outbuildings:	55 m^2
Area of garage:	36 m^2

4.1.4
Erf size:	562 m^2
Area of level 1:	185 m^2
Area of level 1 covered stoep:	25 m^2
Area of level 2:	120 m^2

4.1.5
Erf size:	250 m^2
Area of level 1:	120 m^2
Area of garage:	18 m^2

(5 × 3) (15)

4.2 Refer to the DIAGRAM SHEET (attached) and answer the following:

4.2.1	What is the value for A?	(3)
4.2.2	What is the value for B?	(3)
4.2.3	What is the value for C?	(3)
4.2.4	What is the value for D?	(3)
4.2.5	What is the value for E?	(3)
4.2.6	What does IL stand for?	(3)
4.2.7	What does GL stand for?	(3)
4.2.8	What does VP stand for?	(2)
		[38]

QUESTION 5: QUANTITIES AND COSTING IN A BUILDING PLAN

5.1 Give EIGHT typical expenses incurred by a building contractor when building a dwelling. (8)

5.2 Name EIGHT construction activities from when the substructure and floor plinth is cast to when the site is handed over to the client. (8)

[16]

TOTAL: 100

Copyright reserved

(12050644)

DIAGRAM SHEET

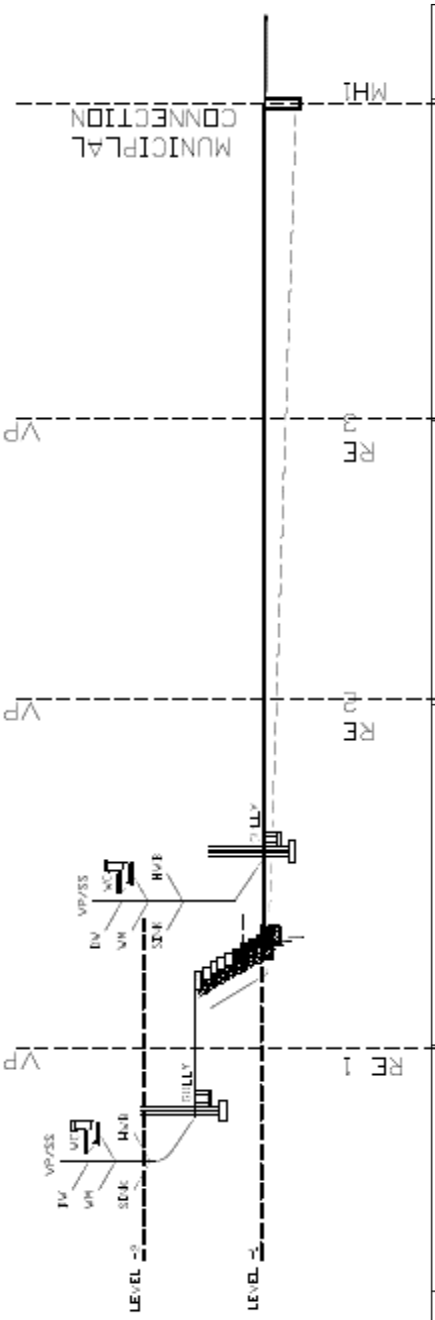

GL	12 500	10 000		10 000	10 000	
IL	12 050		A		B	D
DEPTH	450	616		C		E
DISTANCE	100Ø UPVC	10 000		8 000		9 000
GRADIENT		TO SLOPE /160				160
PIPE						

DRAINAGE SECTION
SCALE 1:50

Copyright reserved