higher education & training

Department:
Higher Education and Training
REPUBLIC OF SOUTH AFRICA

# NATIONAL CERTIFICATE (VOCATIONAL)

# ARCHITECTURAL GRAPHICS AND TECHNOLOGY

(First Paper)

**NQF LEVEL 4**

(12050644)

**19 November 2018 (Y-Paper)**
**13:00–17:00**

**REQUIREMENTS:** **Candidates will require drawing instruments.**
**Six sheet of A3 drawing paper must be provided.**

**Calculators may be used.**

**This question paper consists of 4 pages and a diagram sheet of 6 pages.**

Copyright reserved

**TIME: 4 HOURS**
**MARKS: 100**

## INSTRUCTIONS AND INFORMATION

1. Answer ALL the questions.
2. Read ALL the questions carefully.
3. Number the answers according to the numbering system used in this question paper.
4. ALL drawing work, including candidate information, must be done using an approved CAD software package, printed and titled correctly.
   ALL drawing work must comply with the relevant SANS (SABS) recommended codes.
5. ALL the abbreviations and symbols must comply with the latest National Building Regulations and ALL relevant SANS (SABS)-codes.
6. Brick sizes should be taken as 220 × 110 × 75 mm.
7. A balanced layout is very important and candidates will be penalised for poor planning.
8. The sketches and/or diagrams must be done in pencil, be neat, reasonably large, in proportion and fully labelled.
9. Write neatly and legibly.

Copyright reserved 

## QUESTION 1: STAIRCASES

As a draughtsperson you are required to draw to scale 1 : 10 on an (A3) sheet of paper, a sectional view of a timber staircase in detail. Showing at least 5 stairs.

The drawing must clearly show the following annotations and dimensions:

1.1 Riser @ 190 mm

1.2 Tread @ 250 mm + 50 mm going

1.3 220 × 70 stringer

1.4 975 mm high handrail/balustrade with horizontal balustrading with a minimum gap of 150 mm.

1.5 75 mm Newel posts, every 3rd tread

Print a suitable title and scale beneath the sectional view. **[10]**

## QUESTION 2: BUILDING PLANS (FLOOR PLAN LAYOUTS – LEVELS 1 AND 2)

DIAGRAM SHEETS 1 and 2 – Show rough layout sketches of levels 1 and 2 of a double-storey dwelling. DIAGRAM SHEET 4 shows a site plan with key dimensions.

BRIEF SPECIFICATIONS

| | |
|---|---|
| Roof pitch | single pitch roof = 5 degrees |

Roof cover IBR treated sheeting – dolphin grey.
Level 1 Floor to underside concrete slab 2 550 mm level 1
Level 2 Floor to top of wallplate height 2 550 mm level 2

| | |
|---|---|
| Roof rafter | 220 × 70 @ 800 mm c/c |
| Concrete foundations | 630 mm × 230 mm |
| External walls | 280 mm cavity wall |
| Internal walls | 110 mm brick wall |
| Concrete floor level 1 | 100 mm concrete on 250 mcm polythene dpm lapped and Sealed, on 50 mm blinding on 250 mm hardcore. |
| Concrete slab level 2 | 200 mm reinforced concrete slab to engineers detail. |
| Fascia boards | 220 mm × 32 mm SA pine |

Windows and doors as per DIAGRAM SHEET 5.

As an architectural draughtsperson the architect you work for requires you to compile a finished set of working drawings. By using the information above and the rough sketches provided – you need to complete the set of working drawings for the architect to check. You can scale off the rough layout sketches, however, the dimensions not given must be the same as the key dimensions indicated on DIAGRAM SHEETS 1 and 2.

Copyright reserved 

Draw/Trace the following using a scale 1 : 100 on an A3 sheet of paper. The drawing must be detailed in full.

2.1 Level 1 plan layout. (20)

2.2 Level 2 plan layout. (20)

Include room names and floor finishes for levels 1 and 2
ALL dimensions for levels 1 and 2 should be according to the recommended code of drawing practice.
Symbols on all windows and doors as shown.
Indicate a section lines and the direction of section arrows AA
Provide a suitable title and scale for both levels 1 and 2 plan layouts.
Indicate a suitable north point
Indicate the kitchen sink and stove.
Show a dog leg staircase with the correct number of risers numbered for height. **[40]**

**QUESTION 3: SECTION AA THROUGH DWELLING**

Draw, using a scale of 1:50 on an A3 sheet of paper – section AA through the dwelling As shown on DIAGRAM SHEET 6 (attached) indicate the following specifications.

3.1 The correct pitch, roof covering, rafters and heights

3.2 Gutter and fascia

3.3 Strip foundations

3.4 Level 1 concrete floor slab, level 2 concrete slab

**[20]**

**QUESTION 4: ELEVATIONS**

Draw using a scale 1 : 100 on an A3 sheet of paper, any 3 elevations.

DIAGRAM SHEET 3 (attached) will help give an overview of the style of home being draughted.

Indicate the following specifications.

4.1 The correct pitch, roof covering, truss and heights

4.2 Types of finishes

4.3 Correct windows drawn

**[30]**

**TOTAL: 100**

Copyright reserved

**DIAGRAM SHEET 1**

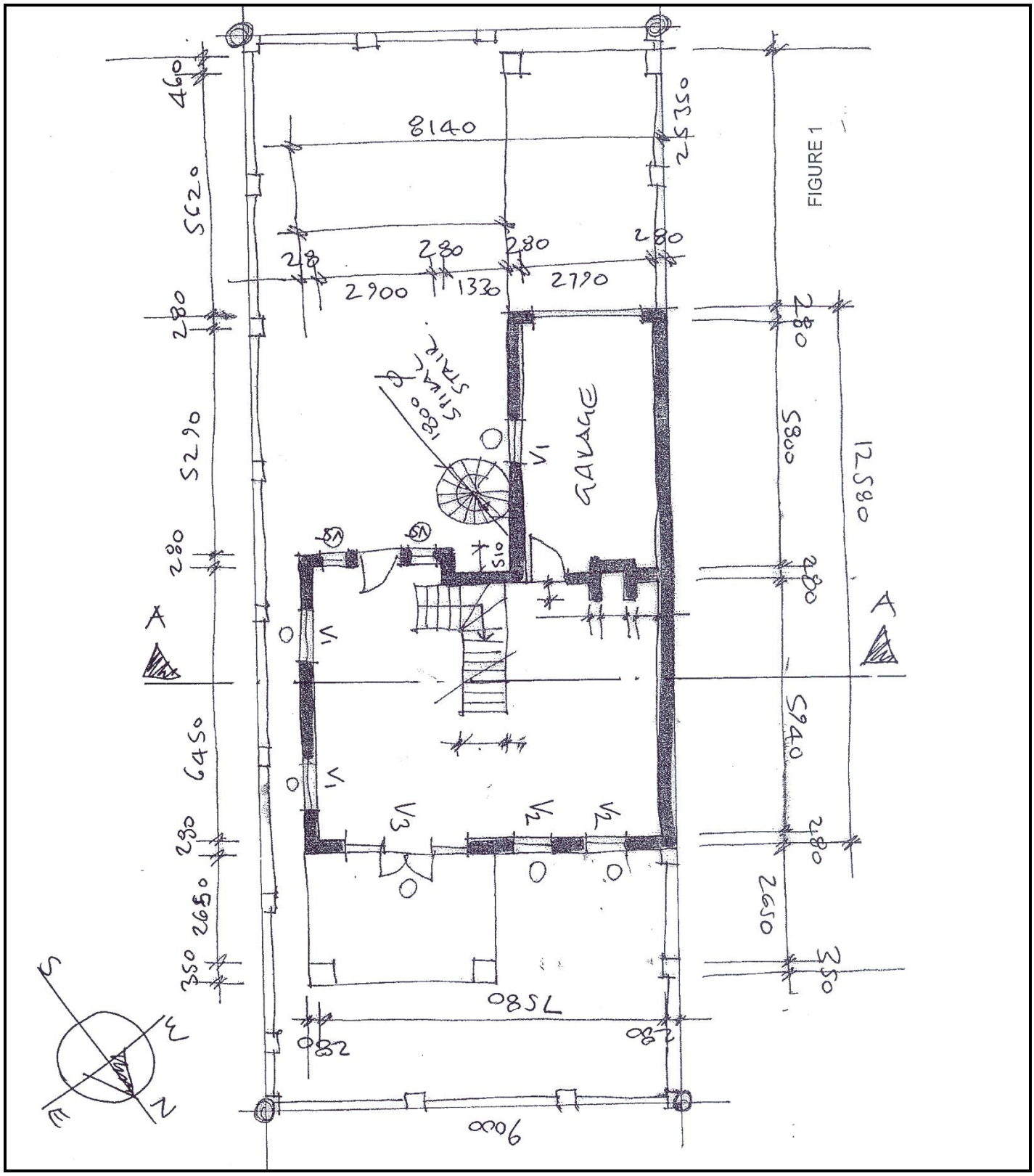


**FIGURE 1**

Copyright reserved 

**DIAGRAM SHEET 2**

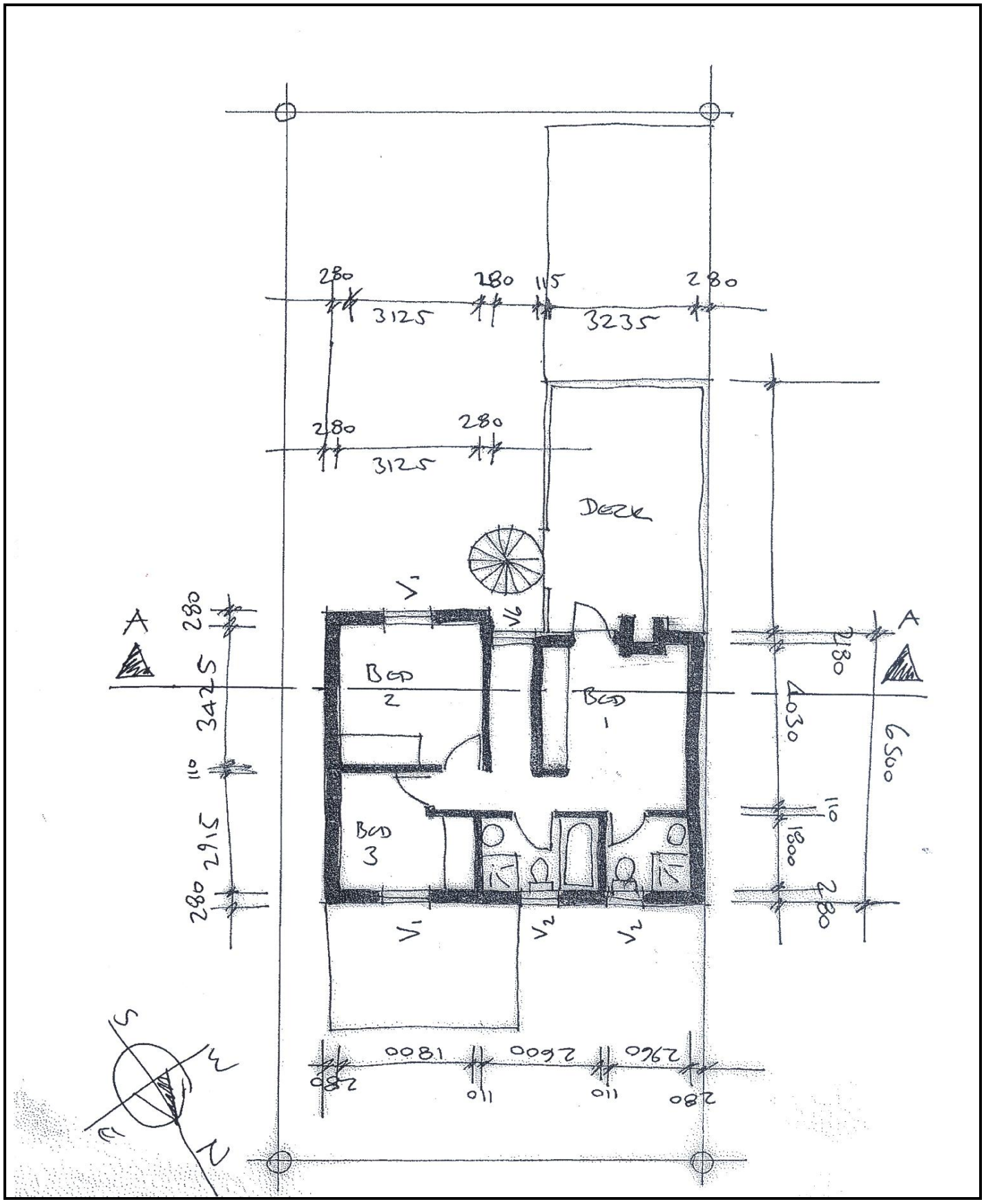


**FIGURE 2**

Copyright reserved 

**DIAGRAM SHEET 3**

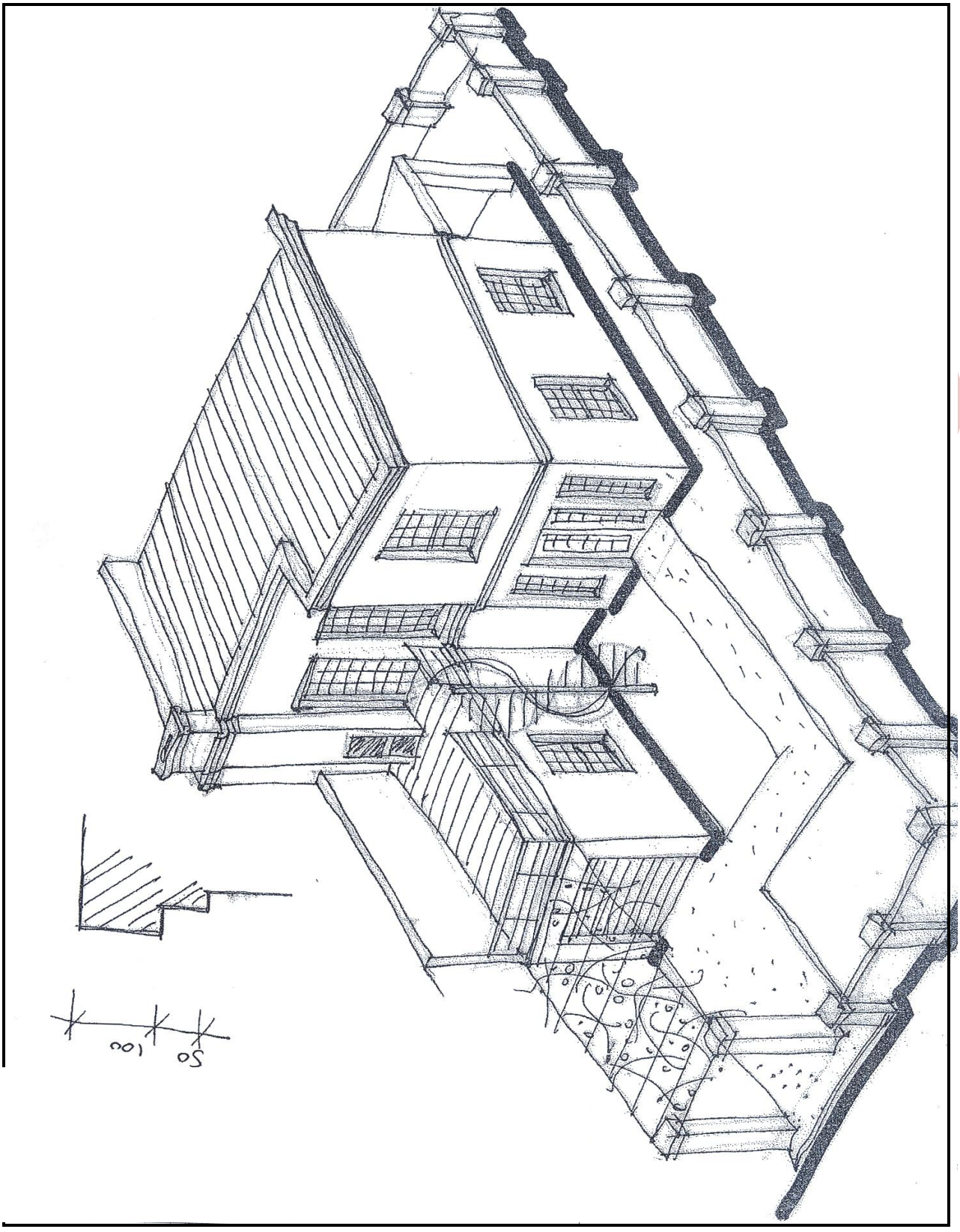

**FIGURE 3**

Copyright reserved 

## DIAGRAM SHEET 4

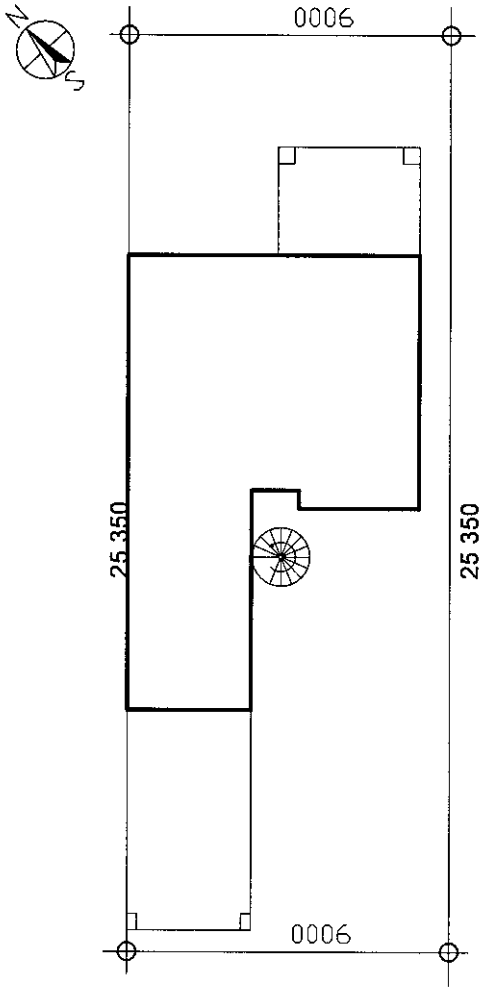


**SITE PLAAN SCAL 1 :200**

**FIGURE 4**

Copyright reserved 

## DIAGRAM SHEET 5

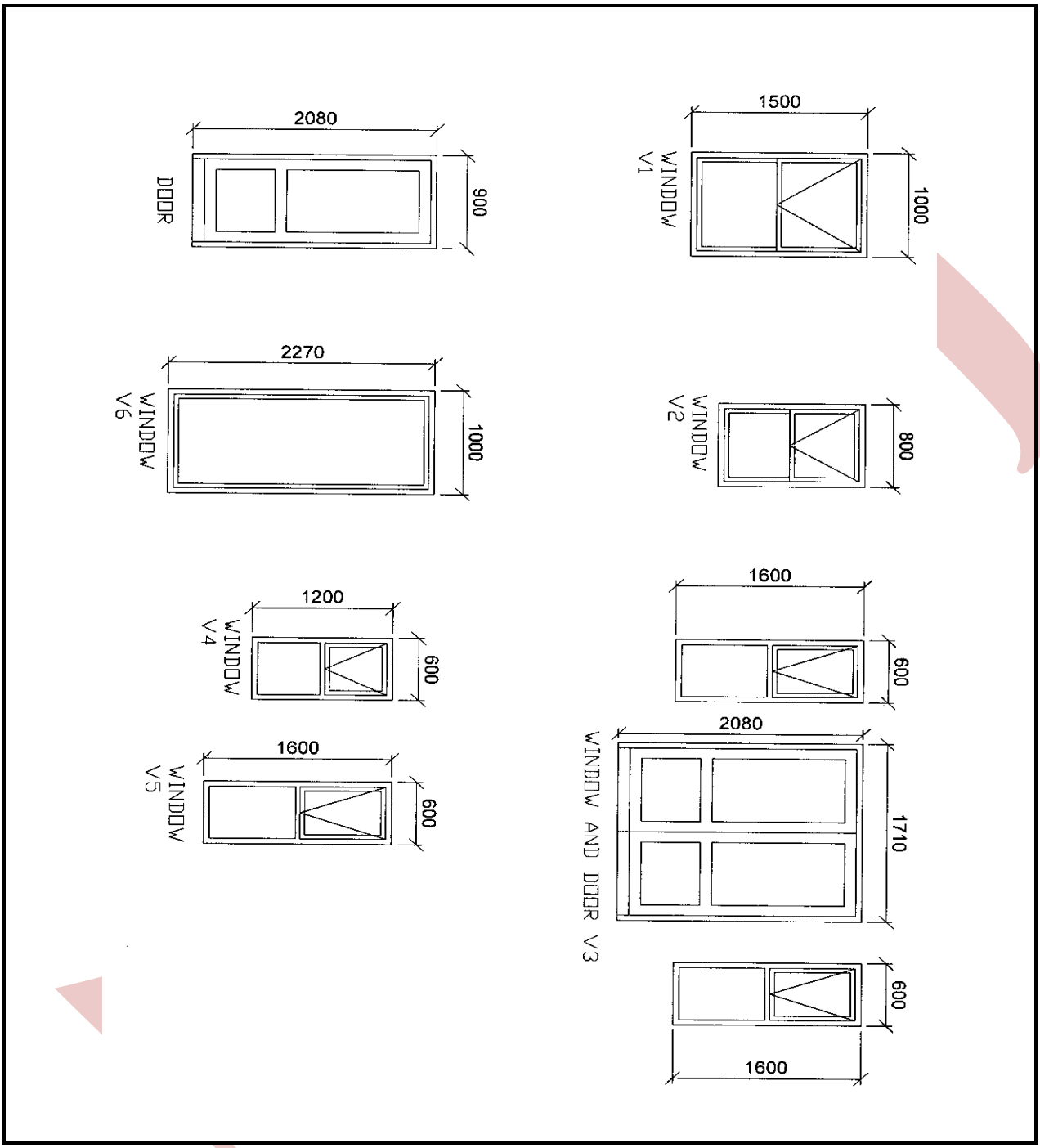


**FIGURE 5**

## DIAGRAM SHEET 6

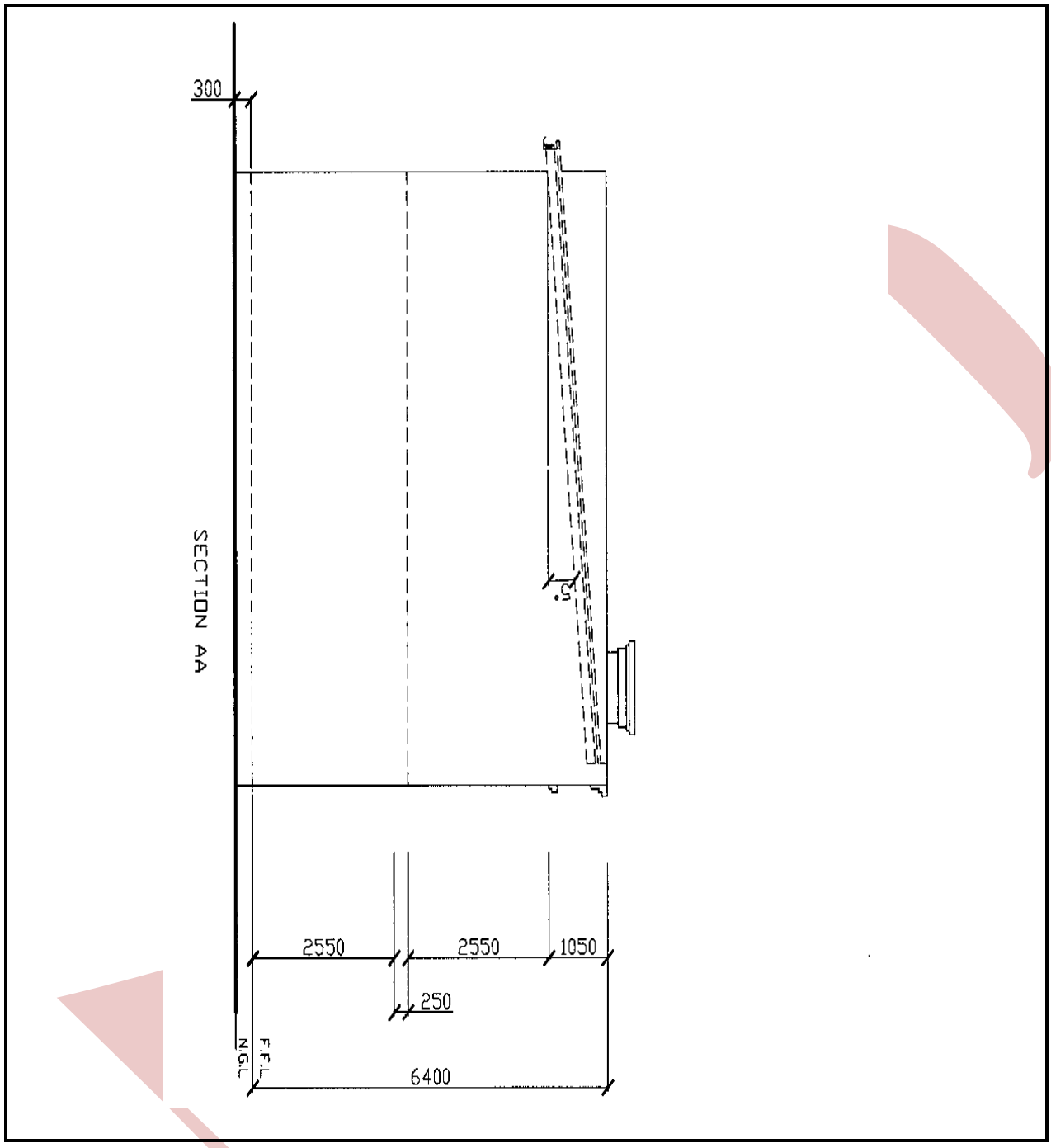


**FIGURE 6**

Copyright reserved