higher education & training

Department:
Higher Education and Training
REPUBLIC OF SOUTH AFRICA

MARKING GUIDELINE

NATIONAL CERTIFICATE (VOCATIONAL)

ARCHITECHTURAL GRAPHICS AND TECHNOLOGY

(Second paper)

NQF LEVEL 3

8 December 2020

This marking guideline consists of 5 pages.

Copyright reserved

QUESTION 1

1.1
- Lack of understanding of the terms of reference on the contract.
- Interpretation of the contract and the client's needs and expectations.
- Technical communication breakdown to do with the client's needs on working drawings of the projects.
- No explanations about or progress on the project are provided. (4)

1.2 The communications between these two people are via phone, e-mail, and takes place daily.✓ It usually includes site visits as well.✓ The contract manager's main responsibility is ensuring that the site manager has all the resources he needs.✓ The contract manager is directly answerable to the architect.✓ (4)

1.3
1.3.1 Drawings
1.3.2 Legal contract
1.3.3 3D models
1.3.4 Site plan (4)
[12]

QUESTION 2

2.1 Presentation drawings are to present the proposed building in an attractive setting at a proposed site for promotional purposes.✓ These drawings usually consist of perspective views complete with colours and shading,✓ although they may also contain nicely drawn elevation views with shadows and landscaping.✓ They are therefore essentially selling tools✓ – a means to sell the building or project before it reaches the working-drawing stage. They are also used in brochures and other publications.✓ (5)

2.2
- Proportion
- Correctness
- Neatness
- Accuracy (4)

2.3
- Northeast
- Northwest
- Southeast
- Southwest (4)

2.4 The resident engineer can be a civil, geotechnical, electrical or structural engineer.✓ He monitors and verifies that work is done according to the contract documents.✓ He must be able to communicate clearly with contractors' engineer designers, utility companies and government or public agencies.✓ He needs to be able to answer contractor questions and solve problems.✓ He also does quality control inspections and scheduling. (4)
[17]

Copyright reserved

QUESTION 3

3.1
A – Gutter
B – Fascia board
C – Downpipe
D – Tie beam 114 × 38
E – Rafter 114 × 38
F – Wall plate 114 × 38
G – DPC
H – 75 mm concrete slab
I – Compacted hardcore filling
J – Screed
K – 76 × 50 mm purlin
L – 38 × 38 brandering (12)

3.2
3.2.1 True
3.2.2 True
3.2.3 False
3.2.4 True
3.2.5 False
3.2.6 True
3.2.7 True
3.2.8 True
3.2.9 True
3.2.10 True
(10 × 1) (10)

3.3
- 1:1
- 1:2
- 1:5
- 1:10
- 1:20
- 1:50 (Any 5 × 1) (5)

3.4
- DPC (Damp proof course) is used under loadbearing and non-loadbearing walls, below windowsills and above lintels for windows, to prevent water from seeping into the superstructure walls.
- DPM (damp proof membrane) is laid under the surface bed to prevent damp from rising through the concrete into the floor of the finished building. (2)

3.5
- They are fully above the NGL and are used on flat sites.
- They do not require any beam excavation or hard-core filling.
- The slab-panels are one-meter grids.
- Wire mesh is used close to the surface of the floor slab, while individual reinforcing bars are used at the bottom of the ribs.
- Very little concrete is needed.
- No or little excavation rubble is produced. (6)

Copyright reserved

3.6
- Excavation of the edge beam
- Width of edge beam
- Thickness of the raft
- Compacted fill in layers of 150 mm
- 250-micron waterproofing membrane under raft
- 50 mm sand binding layer
- Mesh reinforcing (5)

[40]

QUESTION 4

4.1

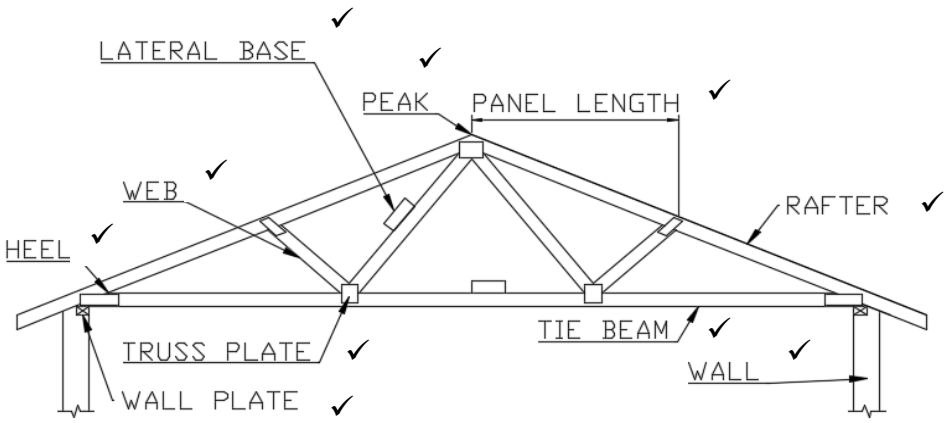

(10)

4.2 A pitch truss is a common truss, which is characterised by its triangular shape.✓ It is the most often used truss in roof construction.✓ Some of these common trusses are named according to their web configuration, such as the Fan, Fink and Howe truss.✓ The chord and web configuration are determined by load, span and spacing.✓ All truss designs are optimised to provide the most economical application.✓ (5)

4.3
4.3.1 Rafter
4.3.2 Pitch/Angle
4.3.3 Runner
4.3.4 Bottom chord (4)

4.4
- Gable roofs – where the roof ends vertically level at both ends.
- Hip roofs – where the roof ends in a slope.
- Monopitch roofs – where there is only one slope. These roofs commonly rest against the side of a larger building.
- Flat roofs – where the pitch is very slight and these roofs can stand alone.
- Conical roofs – on round buildings like turrets. (5)

[24]

QUESTION 5

5.1 A door is a screen used to seal an opening into a building or between rooms.✓ Doors can be designed to swing from one edge, slide, slide and fold or roll to close an opening.✓ It can be made of various materials like; timber, metal, aluminium, PVC, plastic or glass.✓ All doors are classified by their position in a building, by their function or by their method of construction.✓ They can be classified as internal or external doors.✓ (5)

5.2 5.2.1 Head – main horizontal member at the top of the window or door.
5.2.2 Panel – material (wood, latilla, louvre, etc.) inserted into the frame formed by stiles, rails and mulls of a door. (2)
[7]

TOTAL: 100

Copyright reserved