higher education & training

Department:
Higher Education and Training
REPUBLIC OF SOUTH AFRICA

NATIONAL CERTIFICATE (VOCATIONAL)

ARCHITECTURAL GRAPHICS AND TECHNOLOGY

(Second Paper)

NQF LEVEL 3

(12050633)

20 November 2018 (X-Paper)
09:00–12:00

Calculators may be used.

This question paper consists of 7 pages.

NCV

Copyright reserved

TIME: 3 HOURS
MARKS: 100

INSTRUCTIONS AND INFORMATION

1. Answer ALL the questions.
2. Read ALL the questions carefully.
3. Number the answers according to the numbering system used in this question paper.
4. Sketches and/or diagrams must be done in pencil, be neat, reasonably large, in proportion and fully labelled.
5. ALL drawing work must comply with the relevant SANS (SABS) recommended codes.
6. Take brick sizes as 220 × 110 × 75 mm.
7. ALL abbreviations and symbols must comply with the latest National Building Regulations and ALL relevant SANS (SABS) codes.
8. Write neatly and legibly.

Copyright reserved

QUESTION 1

1.1 List the FIVE elements of the communication process. (5)

1.2 Give FIVE disadvantages of the scope of work. (5)

1.3 Explain the benefits of using freehand drawing as a communication tool on a construction site. (6)

[16]

QUESTION 2

2.1 List FIVE construction-drawing categories. (5)

2.2 Explain the term *bulk factor*. (5)

2.3 Calculate how many floors a building can have with a bulk factor of 8. Permissible coverage is 50% on a stand of 200 m². (5)

[15]

QUESTION 3

3.1 Indicate whether the following statements are TRUE or FALSE. Choose the answer and write only 'True' or 'False' next to the question number (3.1.1–3.1.8) in the ANSWER BOOK.

3.1.1 A surface bed is the concrete structure underneath a floor finish.

3.1.2 Wall-plates are usually made of steel.

3.1.3 Superstructure brickwork includes the walls, windows and doors that form part of a house, as well as the brickwork above the foundations.

3.1.4 Section drawings show in detail where a house is cut.

3.1.5 Foundation brickwork is not part of a building or wall that supports the superstructure.

3.1.6 Backfill is the replacement of earth into a trench or pier excavation around and against a basement foundation.

3.1.7 A design specification for a waffle foundation depends on proper ground analyses.

3.1.8 DPC is used under window sills to protect walls against damp.

(8 × 1) (8)

Copyright reserved

3.2 Define each of the following terms:

3.2.1 Under-tile plastics

3.2.2 Dimensions

3.2.3 Backfill

(3 × 2) (6)

3.3 Explain the reasons for using construction-detail drawings. (4)

3.4 List SIX scales used when producing detailed scale working drawings and cross sections. (6)

3.5 Study FIGURE 1 below and answer the questions.

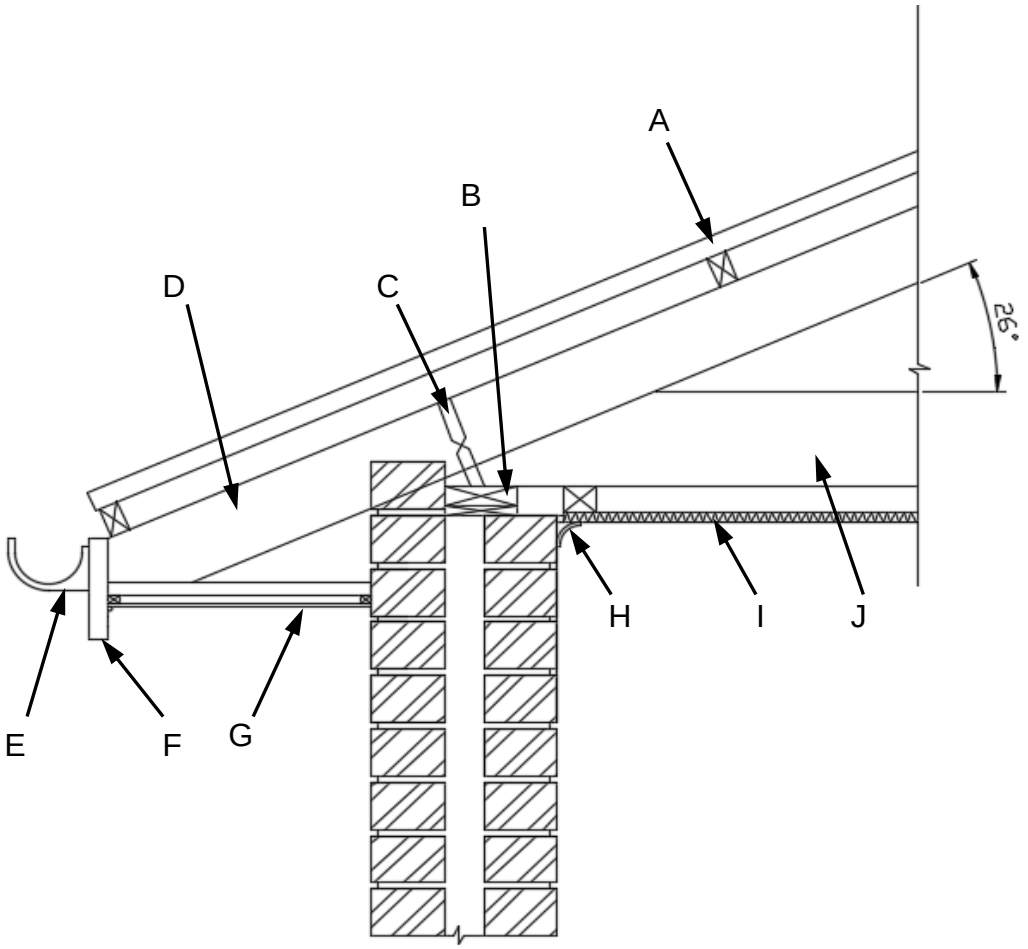

FIGURE 1

3.5.1 Describe the detail shown in FIGURE 1. (2)

3.5.2 Label the parts by writing only the answer next to the letter (A–J) in the ANSWER BOOK. (10)

[36]

QUESTION 4

4.1 Choose a term from COLUMN B that matches a description in COLUMN A. Write only the letter (A–F) next to the question number (4.1.1–4.1.5) in the ANSWER BOOK.

COLUMN A		COLUMN B	
4.1.1	Intersection of two roof surfaces over an external corner of a building	A	chord
4.1.2	Truss end joint where the top and bottom chords connect	B	heel
4.1.3	Main member that forms the outline of a truss	C	joist
4.1.4	Beam that supports a floor or a ceiling	D	mono-pitch truss
4.1.5	Truss with only one rafter slope	E	hip
		F	web

(5 × 1) (5)

4.2 Name each of the following types of roof trusses:



4.2.1

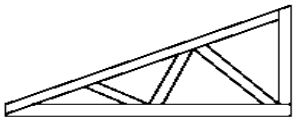

4.2.2

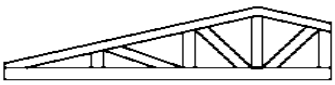

4.2.3

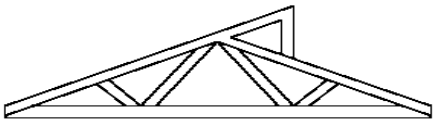

4.2.4

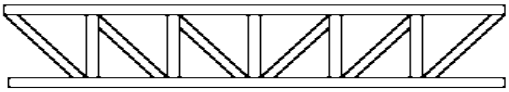

4.2.5

(5 × 1) (5)

4.3 Give TWO criteria for roof designs. (2)

4.4 State THREE rules laid down by the National Standards SANS 10400 for drawing up a roof-truss plan. (3)

4.5 Give TWO advantages and TWO disadvantages of bolted roof trusses. (2 + 2) (4)

4.6 Give the centre-to-centre truss spacing for each of the following roof coverings:

4.6.1 Clay tiles

4.6.2 Metal tiles

4.6.3 IBR sheeting

(3 × 1) (3)
[22]

QUESTION 5

5.1 Explain each of the following door terms:

5.1.1 Mortise lock

5.1.2 Mullion

5.1.3 Panel

5.1.4 Top rail

5.1.5 Fixed panel

5.1.6 Sill

(6 × 1) (6)

NCV

5.2 Label the parts in FIGURE 2 by writing only the answer next to the question number (5.2.1–5.2.5) in the ANSWER BOOK.

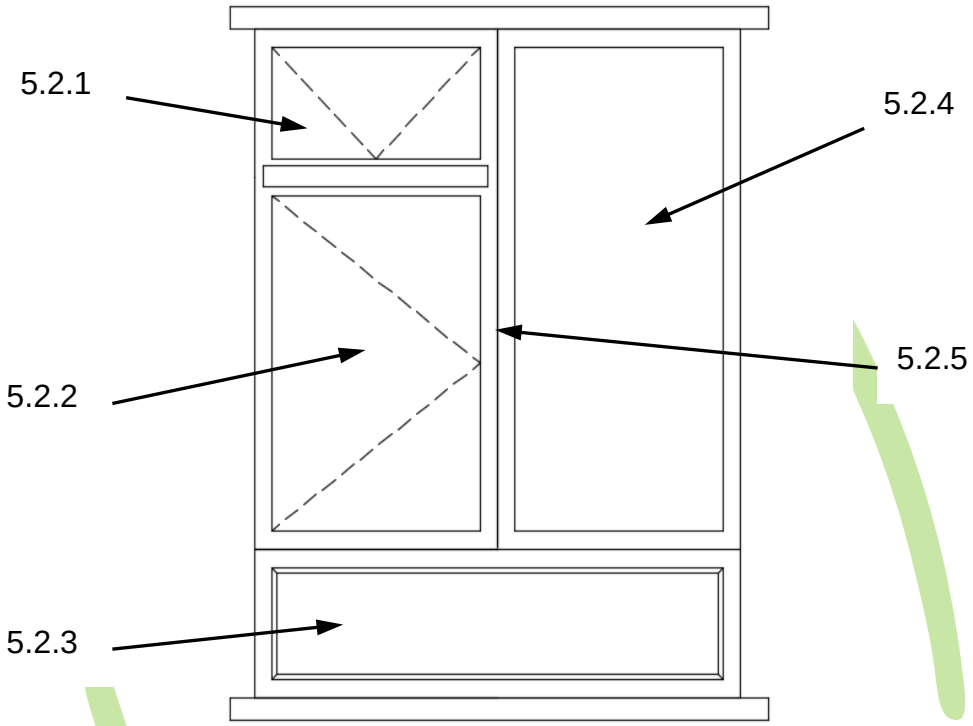

FIGURE 2

(5 × 1) (5)
[11]

TOTAL: 100

Copyright reserved