higher education & training

Department:
Higher Education and Training
REPUBLIC OF SOUTH AFRICA

NATIONAL CERTIFICATE (VOCATIONAL)

ARCHITECTURAL GRAPHICS AND TECHNOLOGY

(Second paper)

NQF LEVEL 3

(12050633)

12 March 2020 (X-paper)
09:00–12:00

Calculators may be used.

This question paper consists of 7 pages.

541Q2S2012

Copyright reserved

TIME: 3 HOURS
MARKS: 100

INSTRUCTIONS AND INFORMATION

1. Answer all the questions.
2. Read all the questions carefully.
3. Number the answers according to the numbering system used in this question paper.
4. Sketches and/or diagrams must be done in pencil, be neat, reasonably large, in proportion and fully labelled.
5. Take brick sizes as 220 mm × 110 mm × 75 mm.
6. All drawing work must comply with the relevant SANS (SABS) recommended codes.
7. All abbreviations and symbols must comply with the latest National Building Regulations and all relevant SANS (SABS) codes.
8. Write neatly and legibly.

Copyright reserved

QUESTION 1

1.1 Indicate whether the following statements are TRUE or FALSE by writing only 'True' or 'False' next to the question number (1.1.1–1.1.10) in the ANSWER BOOK.

1.1.1 Proportion is an important aspect of freehand drawing.

1.1.2 Freehand drawings do not have to be neat with the outlines darker and bolder than other lines.

1.1.3 When doing a freehand drawing the paper will be clipped to the board.

1.1.4 Freehand drawing should not be used for doing actual construction work on a site.

1.1.5 Every time a change or amendment is made to a drawing, it is indicated with a revision number.

1.1.6 For effective communication, a 3D model can be generated on CAD so that all participants can see the model before construction starts.

1.1.7 Drawings cannot be used to work out exactly how much time, labour and materials are needed to build a structure.

1.1.8 Frustration can be caused by poor or no communication.

1.1.9 The site plan shows exactly where a building is situated on the site.

1.1.10 It is not clear what the structure will look like on architectural drawings.

(10 × 1) (10)

1.2 State FIVE areas of communication barriers. (5)

[15]

QUESTION 2

2.1

COMPONENTS

1. The figure sBCt represents Erf 2965 Simonstown, View SG Dgm No 10310/1985, annexed to D/T 1989 -9597
2. The figure AstD represents Erf 2966 Simonstown, View SG Dgm No 10311/1985, annexed to D/T 1980 -2287

SG No
Approved
for Surveyor General

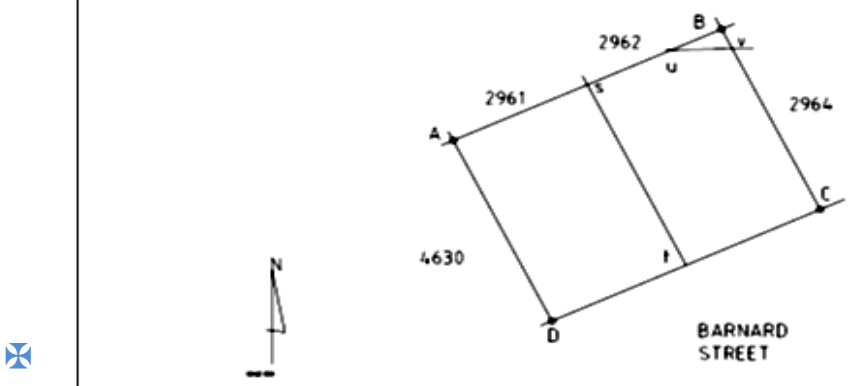

The figure A B C D
Represents 454 square meters of land being
ERF 5177 SIMONSTOWN
Situate in Upper Mount Pleasant Township,
In the City of Cape Town,
Administrative District of the Cape,
Province of Western Cape

Compiled in April 2009
by me

D J W Forsyth
Professional Land Surveyor
Registration No, PLS 1029

File No S/2543/80
S. R. No. Compiled
Comp AHNH-33623(M2687)

2.1.1 What is the erf number for figure ABCD?

2.1.2 In which town are the stands situated?

2.1.3 Write down the SG diagram number for erf 2966.

2.1.4 What is the size of the original erf in square meters?

2.1.5 Who is the land surveyor?

2.1.6 What is the land surveyor's registration number?

2.1.7 When was the file compiled?

(7 × 1) (7)

2.2 Explain the term *sewerage connection*. (3)

[10]

Copyright reserved

QUESTION 3

3.1 The diagram below shows a section through a waffle raft foundation with edge thickening.

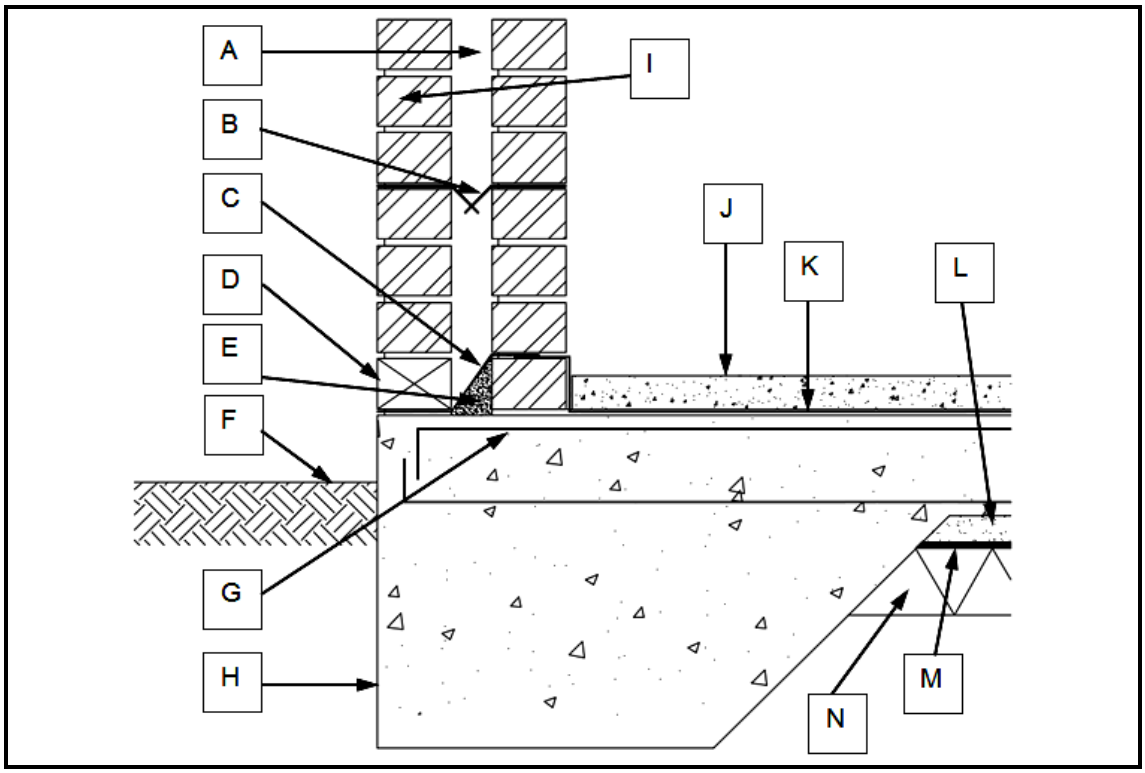

Refer to the list of specifications below and choose the correct specification for each label. Write only the number of the specification next to the letter (A–N) in the ANSWER BOOK.

Specifications:

1. Edge thickening to 150 mm reinforced concrete raft
2. NGL
3. DPC
4. 50 mm sand-binding layer
5. Filled cavity
6. Damp-proof membrane
7. 150 mm layers compacted fill
8. Cavity wall ties
9. Floor screed
10. Weep hole
11. Mesh reinforcing
12. 250 micron waterproofing membrane
13. Cavity
14. External brick wall

(14)

3.2 Choose a term from COLUMN B that matches a description in COLUMN A. Write only the letter (A–G) next to the question number (3.2.1–3.2.5) in the ANSWER BOOK.

COLUMN A		COLUMN B	
3.2.1	Trim along the edges of the eaves	A	web
3.2.2	Internal members of a truss subject to axial loads due to truss action	B	valley
3.2.3	Truss member forming the top edge of a truss	C	design loads
3.2.4	Intersection of two roof surfaces over an internal corner of a building	D	top chord
3.2.5	Various loads that a truss is designed to support	E	fascia
		F	king post
		G	jack rafter

(5 × 1) (5)

3.3 List FIVE scales that can be used for detailed scaled working drawings. (5)

3.4 Explain each of the following terms:

3.4.1 Superstructure

3.4.2 Foundation

3.4.3 Backfill

(3 × 2) (6)

3.5 Explain why it is necessary to have a construction detail drawing. (5)

[35]

QUESTION 4

4.1 Explain how wall plates are usually supported and state when to support wall plates on the outermost skin of brickwork. (3)

4.2 Explain the term *wall plates*. (3)

4.3 Give TWO advantages and TWO disadvantages of gang-nailed trusses. (2 + 2) (4)

4.4 List FIVE possible loads that trusses must support. (5)

4.5 Explain each of the following criteria for roof design:

4.5.1 Rationally designed roof (2)

4.5.2 Deemed-to-satisfy roof design (3)

4.6 List FIVE timber-roof structures. (5)

[25]

QUESTION 5

5.1 Define each of the following terms:

5.1.1 Pivot window

5.1.2 Flush door

(2 × 2) (4)

5.2 State THREE purposes of a window in a building. (3)

5.3 Draw, in good proportion, a freehand sketch of a timber doorframe and show the following on the drawing:

- Transom
- Head jamb
- Stile
- Fanlight
- Hoop-iron anchors
- Anchor pin

(8)

[15]

TOTAL: 100

Copyright reserved