higher education & training

Department:
Higher Education and Training
REPUBLIC OF SOUTH AFRICA

NATIONAL CERTIFICATE (VOCATIONAL)

STORED PROGRAMME SYSTEMS

NQF LEVEL 4

(10040154)

13 November 2019 (X-Paper)
09:00–12:00

This question paper consists of 5 pages.

Copyright reserved

TIME: 3 HOURS
MARKS: 100

INSTRUCTIONS AND INFORMATION

1. Read ALL the questions carefully.
2. Answer ALL the questions.
3. Number the answers according to the numbering system used in this question paper.
4. Number the drawings neatly and label them.
5. Draw symbols to the IEC standards.
6. Indicate ALL terminal numbering.
7. Indicate ALL labelling.
8. Write neatly and legibly.

Copyright reserved

QUESTION 1

In today's fast-moving, highly competitive industrial world, a company must be flexible, cost-effective and efficient if it wishes to survive.

In the process and manufacturing industries, this has resulted in a great demand for automation using industrial control systems (Stored Program Systems) in order to streamline operations in terms of speed, reliability and product output.

1.1 State THREE characteristics of *fixed automation*. (3)

1.2 What is the common name for *fixed automation*? (1)

1.3 State THREE characteristics of *flexible automation*. (3)

1.4 Explain the kind of automation system you would be use if only one product is produced with no possibility of product change. (2 × 1) (2)

1.5 Draw a communication block diagram to indicate a source, transmitter (sender), a transmission medium, receiver, and a destination for the data message (information). (7 × 1) (7)

1.6 Explain with the aid of drawings the difference between *simplex* and *full duplex* communication. (2 × 2) (4)

[20]

QUESTION 2

2.1 State THREE disadvantages of using hardwired relay ladder logic peer-to-peer control in factories. (3 × 1) (3)

2.2 A FIELDBUS system is an industrial network specifically designed for communication between PLC's or industrial controllers and field devices such as sensors and actuators.

Answer the following related questions.

2.2.1 Explain the difference between *FIELDBUS I/O's* and *traditional I/O's*. (2 × 1) (2)

2.2.2 Explain where you would mount remote field devices in FIELDBUS networks. (2 × 1) (2)

2.2.3 State FIVE advantages of a *FIELDBUS system* over a *conventional hardwired system*. (5)

2.2.4 Draw a block diagram indicating how PROFINET remote networked communication is achieved between two PLC units, a HMI unit that uses a communication module to control a pump motor at a remote pump station. (8 × 1) (8)

[20]

Copyright reserved

QUESTION 3

3.1 Explain the purpose of a *STAR/DELTA starter*. (2 × 1) (2)

3.2 Study the STAR-DELTA (RLL) hardwired control circuit in FIGURE 1 below.

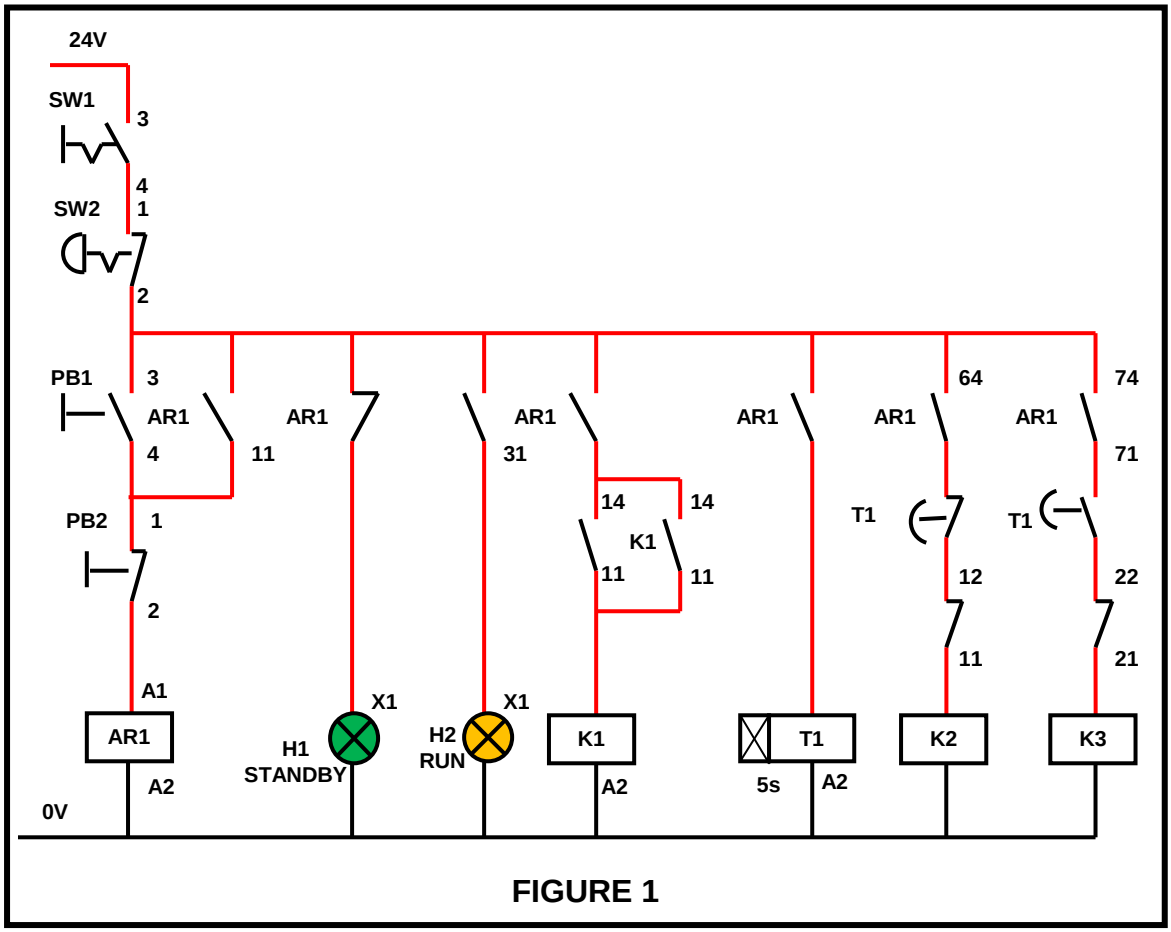

FIGURE 1

Answer the following related questions:

3.2.1 Explain the sequence of operation of the contactors used in FIGURE 1. (3 × 1) (3)

3.2.2 Draw the fully labelled PLC electrical wiring diagram when the hardwired relay ladder logic (RLL) STAR/DELTA system is modified and converted to a PLC controlled soft starter. (8 × 1) (8)

3.2.3 Draw the fully labelled motor controlled power circuit for the STAR/DELTA starter. (6 × 1) (6)

3.2.4 Why does the material list form part of PLC documentation in relation to the PLC I/O's? (1)

[20]

Copyright reserved

QUESTION 4

4.1 Study FIGURE 1 above and write a PLC LAD source code for the STAR/DELTA starter using the information developed in QUESTION 3.2. (8 × 1) (8)

4.2 State SIX functions of a PLC when used in automatic control. (6 × 1) (6)

4.3 Explain the difference between *timed-based control* and *event-based control* when used in sequenced control. (2 × 2) (4)

4.4 Name TWO graphical PLC languages. (2 × 1) (2)

[20]

QUESTION 5

5.1 Explain the meaning of the following terms:

5.1.1 Troubleshooting

5.1.2 Commissioning

5.1.3 Maintenance

5.1.4 PLC Self-diagnostic

(4 × 2) (8)

5.2 Make a drawing to explain the procedure you follow when checking the input to the PLC using the input LED's. (3 × 2) (6)

5.3 The input LED does not illuminate a PLC indicating that the signal does not reach the input interface.

Make a drawing to explain how you would reach the above conclusion. (4 × 1) (4)

5.4 Name TWO charts that can be used to develop a structured maintenance procedure. (2 × 1) (2)

[20]

TOTAL : 100

Copyright reserved