higher education & training

Department:
Higher Education and Training
REPUBLIC OF SOUTH AFRICA

MARKING GUIDELINE

NATIONAL CERTIFICATE (VOCATIONAL)

STORED PROGRAM SYSTEMS
NQF LEVEL 4

2 March 2020

This marking guideline consists of 9 pages.

Copyright reserved

QUESTION 1

1.1 Serial data transmission is sent over a single wire at a low speed✓

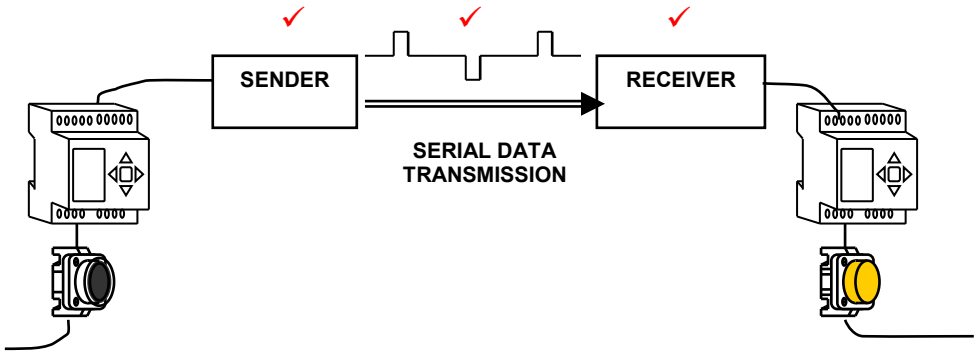

Parallel data transmission is sent over multiple wires at a higher speed ✓

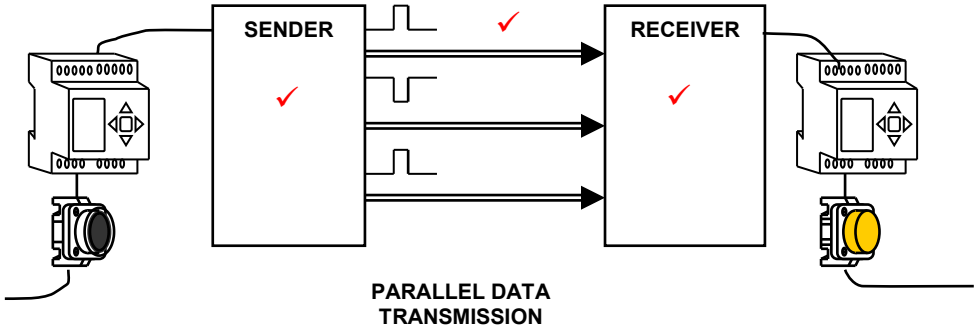

(Marker to use discretion)(2 × 4) (8)

1.2 The global positioning system (GPS) is a navigation system designed by the U.S. Department of Defence and uses satellites orbiting the earth. (2)

1.3 Manufacturing Automation Protocol (2)

1.4
- Motor on/off control achieved remotely via mobile phone
- On-off state detection or indication
- Motor safety such as turning a motor off when the operating temperature gets too hot
- Colour-coded alerts (4)

1.5

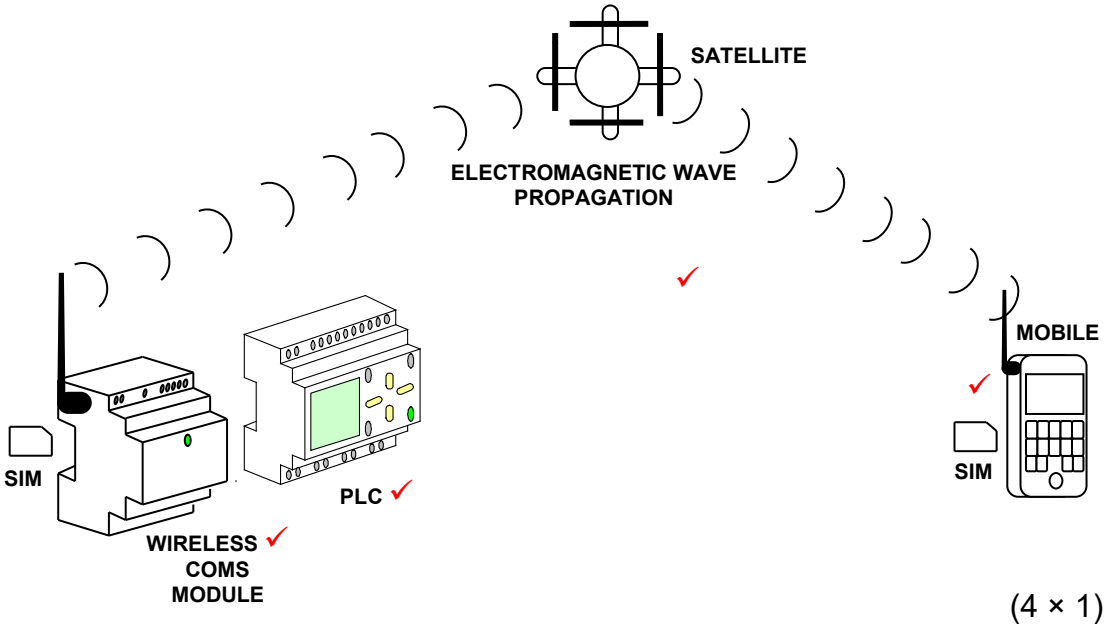

(4 × 1) (4)
[20]

QUESTION 2

2.1
- Bus
- Star
- Tree
- Ring
- Hub

(5)

2.2

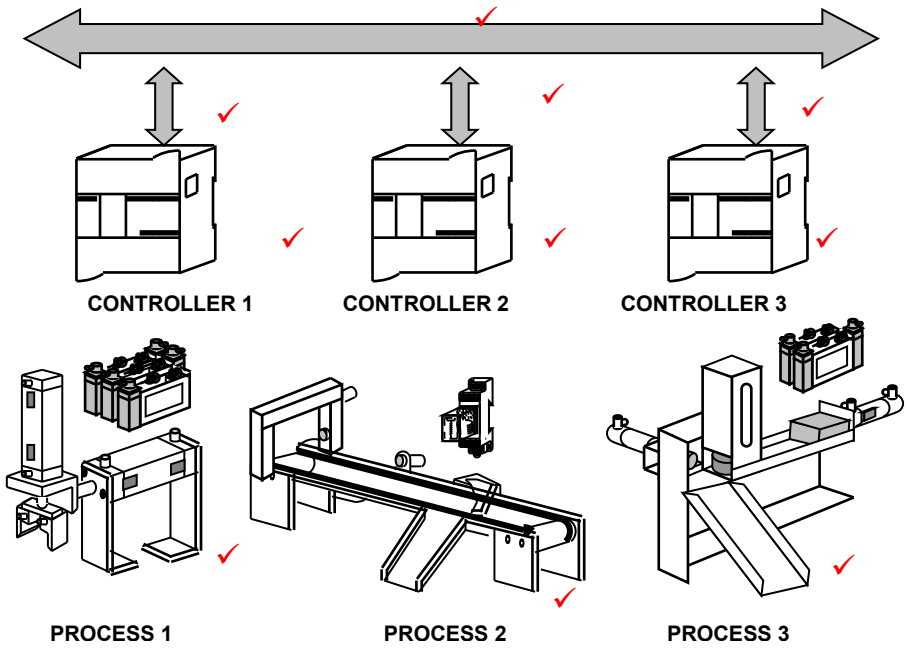

(10 × 1) (10)

2.3 2.3.1 Pneumatic pick-and-place device where axis X,Y and gripper Z are managed by a control sequence +X +Y+Z to move so as to pick up a workpiece then – Y –X, +Y –Z –Y to move and place the work-piece

2.3.2 Pneumatic gravity feeder system where +A1-A1+A2-A2 is the control sequence to eject a workpiece from a buffer station.

(2 × 2) (4)

2.4 RJ 45 (1)

[20]

QUESTION 3

3.1 3.1.1

ITEM	DESCRIPTION	MARKING	APPLICATION	ADDRESS
1	PUSHBUTTON (NO)	PB1	START APPLICATION	I1
2	PUSHBUTTON (NC)	PB2	STOP APPLICATION	I2
3	GREEN INDICATION LAMP	H1	STANDBY INDICATION	Q1
4	AMBER INDICATION LAMP	H2	RUN INDICATION	Q2
5	POWER SUPPLY 220V/24VDC	P/S	SUPPLY CONTROL POWER	N/A
6	LOGO 8I/4O	PLC	APPLICATION CONTROLLER	N/A
7	TERMINALS DIN RAIL	X1	LINKAGE	N/A
8	DETENT SP SWITCH	SW1	POWER UP/DOWN SYSTEM	N/A
9	24V RELAY 4 CONTACT SETS	MCR	DRIVE ACTUATOR	Q3

(Marker to use discretion)(6 × 1) (6)

3.1.2

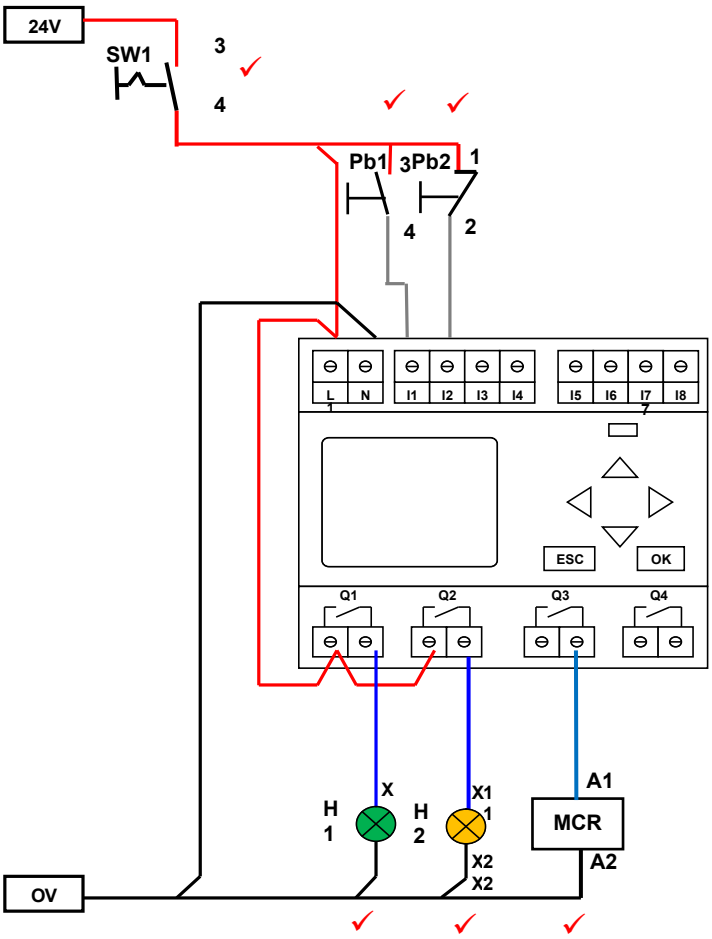

(6 × 1) (6)

3.1.3

OPERATOR	X1	CONTROL	
PB1 (3)	X1.1	24 VDC	✓
PB2 (1)	X1.2		
PB1 (4)	X1.3	PLC (I1)	✓
PB2 (2)	X1.4	PLC (I2)	✓
H1 (X1)	X1.5	0 VDC	✓
H2 (X1)	X1.6		
M1 (X2)	X1.7		
H1 (X2)	X1.8	PLC (Q1)	✓
H2 (X2)	X1.9	PLC (Q2)	
M1 (X1)	X1.10	MCR	✓

(Marker to use discretion)(6 × 1) (6)

Copyright reserved

3.2 The PLC technical-related documentation provides the maintenance personnel with the maintenance required for the various subsystems that make up a mechatronic system as a whole. (2)
[20]

QUESTION 4

4.1

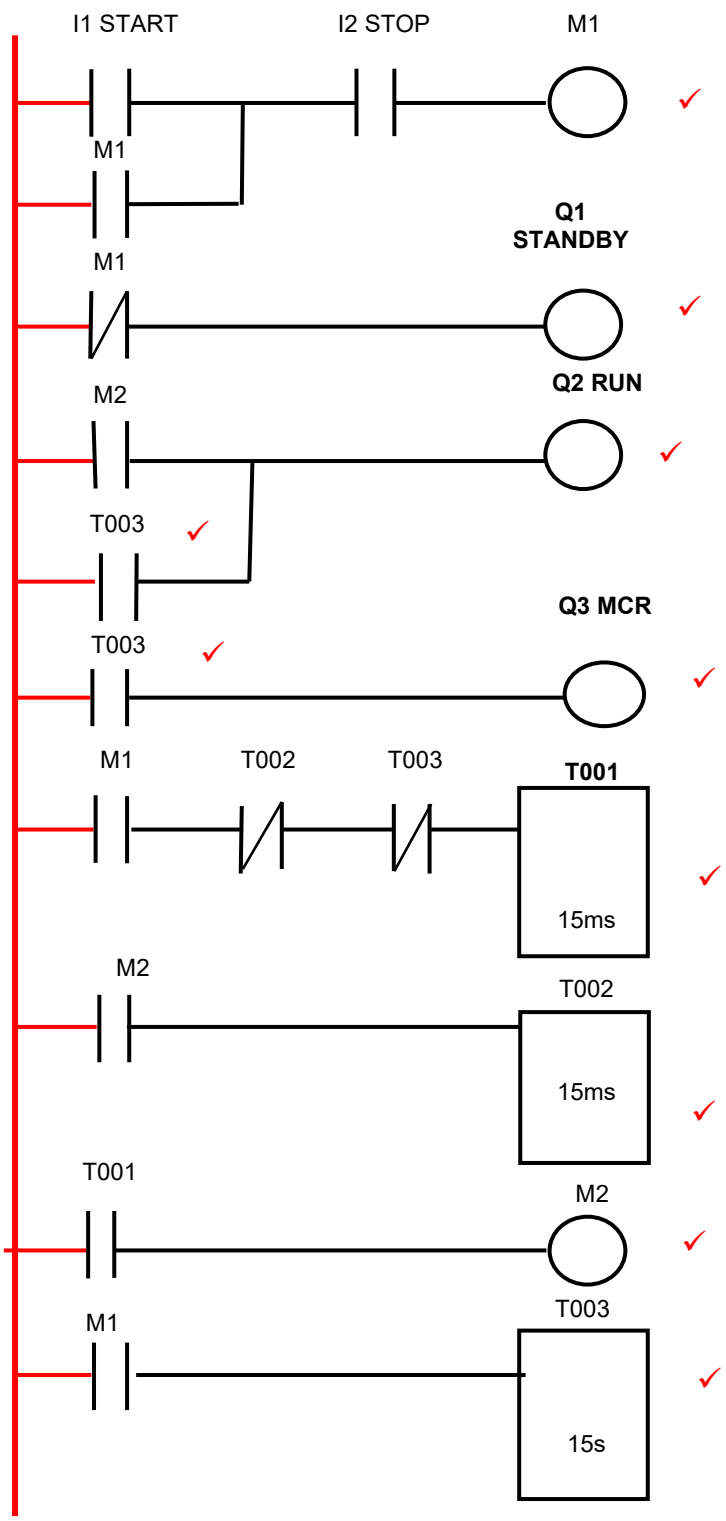

OR

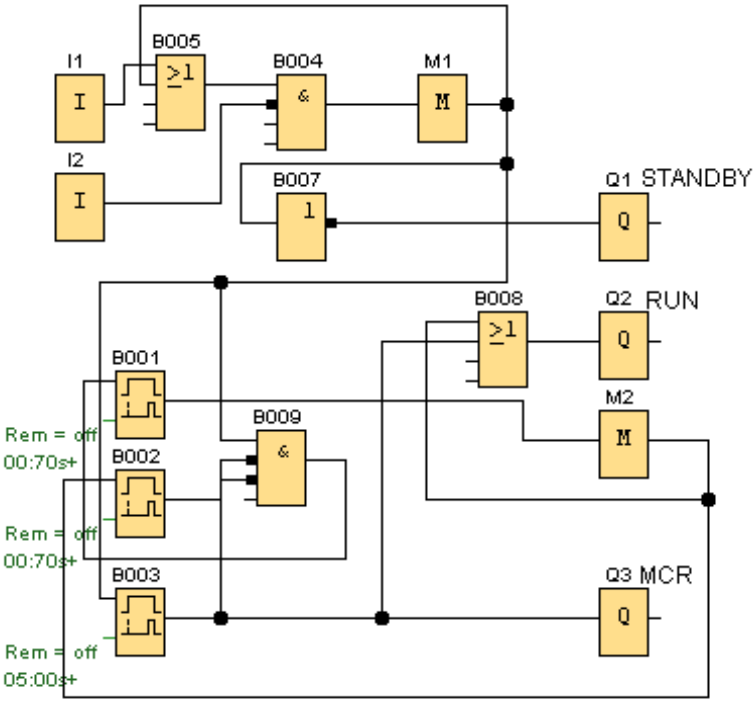

(Marker to use discretion)(10 × 1) (10)

4.2
```
000 LD I1
001 AND NOT I2
002 OR Q1
003  = Q1
```
(4)

4.3 4.3.1 Language used to write a program in simple English.

4.3.2 Another name for the PLC control program.

4.3.3 Symbols used in the application program that represents the hardwired I/Os.

(Marker to use discretion)(3 × 2) (6)
[20]

QUESTION 5

5.1 The PLC technical-related documentation is useful to the troubleshooter in analysing the operation PLC automated control application making it easier to locate the fault. (2)

5.2

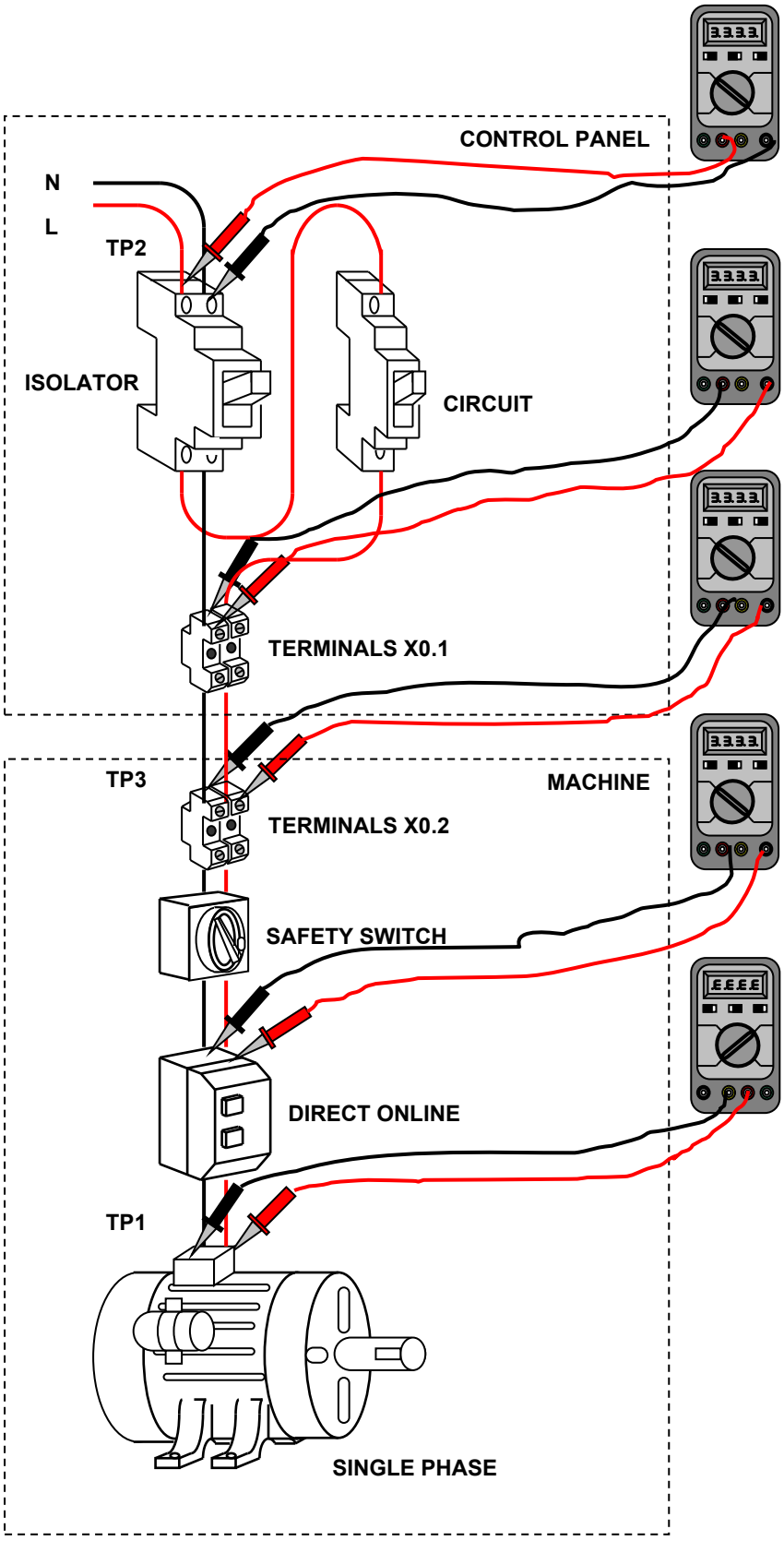

TP 2 =
240V input is measured then checked through the circuit. ✓✓

TP 3 is about ½ way in the circuit:
0V is measured which means that the fault lies between the input voltage and this point.

240V is measured which means that the fault lies between this point and the output load.

The circuit is then divided again until the fault can be found. ✓✓

TP 1 =
0V then test input voltage.

240V then motor is faulty test motor circuit. ✓✓

FOUR MARKS FOR DRAWING ✓✓✓✓
MARKER DISCRETION TO BE USED

(10 × 1) (10)

5.3 The output LEDs are an indication whether there is a program error✓✓ or a hardware fault.✓✓ (2 × 2) (4)

5.4 If the actuator does not energise the motor will not start as there is no power to the drive. (1 × 2) (2)

5.5 At switch-on the PLC will carry out a self-diagnostic test to check if there is sufficient power to handle the system, that the CPU is operating correctly and that there is communication between I/Os. (2)

[20]

TOTAL: 100

Copyright reserved