higher education & training

Department:
Higher Education and Training
REPUBLIC OF SOUTH AFRICA

NATIONAL CERTIFICATE (VOCATIONAL)

DATA COMMUNICATION AND NETWORKING
NQF LEVEL 4

(10041014)

3 December 2020 (X-paper)
09:00–12:00

This question paper consists of 10 pages.

251Q1N2003

Copyright reserved

TIME: 3 HOURS
MARKS: 150

INSTRUCTIONS AND INFORMATION

1. Answer all the questions.
2. Read all the questions carefully.
3. Number the answers according to the numbering system used in this question paper.
4. Start each question on a new page.
5. Use only a black or blue pen.
6. Write neatly and legibly.

Copyright reserved

SECTION A

QUESTION 1

1.1 Various options are given as possible answers to the following questions. Choose the answer and write only the letter (A–D) next to the question number (1.1.1–1.1.10) in the ANSWER BOOK.

1.1.1 How many layers does the OSI reference model have?

A 4
B 5
C 6
D 7

1.1.2 The PSTN is an example of a … network.

A packet-switched
B circuit-switched
C message-switched
D virtual



1.1.3 In half-duplex data transmission, data …

A can be transmitted in one direction only.
B can be transmitted over long distances only.
C can be transmitted in both directions.
D format is simple.

1.1.4 In the OSI reference model, routing is performed by the … layer.

A data-link
B network
C transport
D session



1.1.5 Fibre-optic cables operate at frequencies near …

A 20 MHz
B 200 MHz
C 2 GHz
D 800 THz

1.1.6 A repeater connects segments of the same … network.

A wide-area
B wireless
C local-area
D metropolitan



1.1.7 Typical data transfer rates in LAN are …

A bits topology.
B kilobits per second.
C megabits per second.
D bytes topology.

1.1.8 Which command will list destination MAC addresses on a Windows PC?

A arp -a
B ping
C traceroute
D netstat -a

1.1.9 A technician arrives at a site to troubleshoot an unfamiliar network.

Which of the following steps should be done first to diagnose the problem?

A Escalate the problem to an administrative technician.
B Compare wiring schematics to industry standards.
C Identify symptoms and draw a network diagram.
D Use a port analyser to determine network topology.

1.1.10 Which ONE of the following physical connections allows for the best performance when connecting to a VPN server for a remote user?

A Baseband
B Broadband
C Satellite
D POTS

(10 × 1) (10)

Copyright reserved

1.2 Complete the following sentences by writing only the missing word or words next to the question number (1.2.1–1.2.10) in the ANSWER BOOK.

1.2.1 Computers are based on the … number system.

1.2.2 In … transmission, bits are sent one after the other without a start and a stop bit.



1.2.3 The range of frequencies contained in a composite signal is known as ...

1.2.4 … requires that data should only be accessible by authorised parties.

1.2.5 Electromagnetic waves ranging in frequencies between 3 kHz and 1 GHz are normally called ...

1.2.6 The … command is used to test for end to end connectivity.

1.2.7 You can use … to install an application on all computers on a network.

1.2.8 … can be managed from the server by moving important print requests higher on the list.

1.2.9 … are frequently used goods that must be replaced.



1.2.10 … describes the creation of private networks across the Internet, enabling privacy and tunnelling of non-TCP/IP protocols.

(10 × 1) (10)

Copyright reserved

1.3 Choose a term from COLUMN B that matches a description in COLUMN A. Write only the letter (A–N) next to the question number (1.3.1–1.3.10) in the ANSWER BOOK.

COLUMN A		COLUMN B	
1.3.1	Wireless topology mode where clients interconnect via a wireless router or access point.	A	hotspot
1.3.2	A program that monitors server and network activity and warns of errors and other problems	B	capacity planning
1.3.3	One light signal passing through a cable at any one time	C	modem
1.3.4	A hardware or software barrier between a LAN and an external network.	D	single mode fibre
1.3.5	A list of permits and deny statements	E	ACL
1.3.6	A temporary quick solution that enables a smart phone to provide wireless services of a Wi-Fi router	F	switch
1.3.7	A network device that is used as a common connection point for multiple nodes	G	infrastructure mode
1.3.8	The process used to plan for the extra work that the network will have to do when it grows in the future	H	data confidentiality
1.3.9	Converts analogue signals into digital signals and vice versa	I	data integrity
1.3.10	The maintenance and assurance of the accuracy and consistency of data.	J	network analyser
		K	security wall
		L	ACS
		M	firewall
		N	Ad hoc mode

(10 × 1) (10)

1.4 Indicate whether the following statements are TRUE or FALSE. Choose the answer and write only 'True' or 'False next to the question number (1.4.1–1.4.10) in the ANSWER BOOK.

1.4.1 It is not necessary for a technician to have good communication skills.

1.4.2 VLANs are configured on switches.

1.4.3 The OSI layer 3, the network layer maps directly to the TCP/IP network access layer.

1.4.4 Directional antennas provide 360-degree coverage.

1.4.5 Copper cables are immune to electromagnetic interference.

1.4.6 RJ-45 connectors are eight-wire devices that are most often used in Ethernet connections in LANs.

1.4.7 Redundancy increases the availability and reliability of a network.

1.4.8 Accounting management is not a function performed by the network administrator.

1.4.9 A data VLAN is a VLAN that is configured to carry user-generated traffic.

1.4.10 DSL is a broadband technology that uses existing telephone lines to carry voice, video and data.

(10 × 1) (10)
[40]

TOTAL SECTION A: 40

SECTION B

QUESTION 2

2.1 Compare the OSI reference model with the TCP/IP protocol suite. (6)

2.2 List EIGHT things that a professional IT technician should not do when talking to a client. (8)

2.3 With the aid of a diagram, explain the concept of *cloud computing.* (8)
[22]

QUESTION 3

3.1 You are an IT technician and there has been a report that network printing does not consistently work. The printer is available but print jobs sent to it, are not completed.

3.1.1 State FOUR possible causes of the problem. (4)

3.1.2 Recommend FOUR possible solutions to resolve the problem. (4)

3.2 FIGURE 2 shows a basic LAN connected to an outside network.

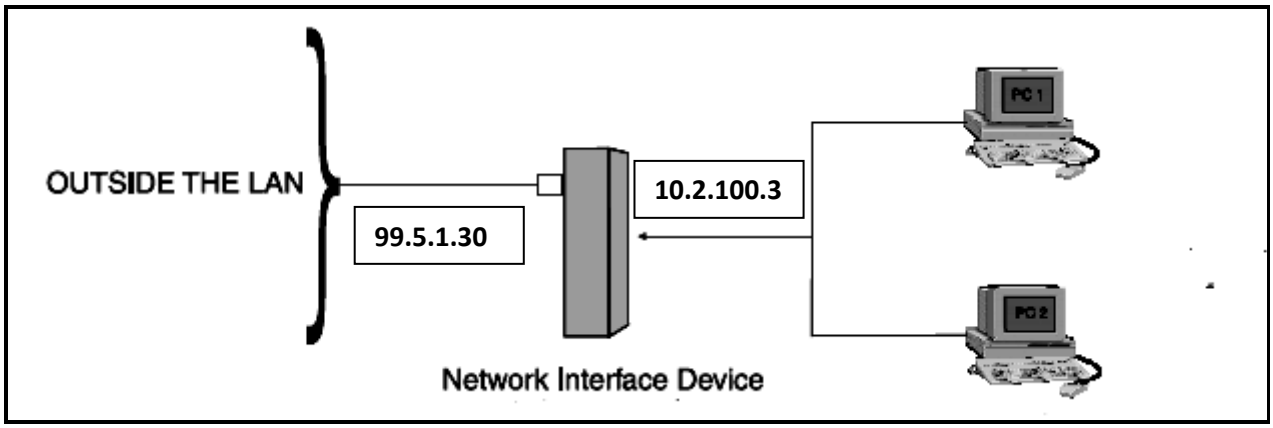

FIGURE 1

3.2.1 Write down the default gateway IP address for PC1 and PC2. (2)

3.2.2 Default subnet masks are being used. Assign correct IP addresses to PC 1 and PC 2. (2)

3.2.3 Name ANY device which can be used as a network interface device in FIGURE 1 (1)

3.2.4 In respect of FIGURE 1, what is the purpose of the network interface device named in QUESTION 3.2.3? (3)
[16]

QUESTION 4

4.1 State and explain SIX benefits of using VLANs. (6 × 2) (12)

4.2 FIGURE 2 shows two PCs connected to a switch. The IP addresses of the PCs are shown in the diagram. PC1 (192.168.1.2) is connected to port 2 on the switch and PC2 (192.168.1.3) is connected to port 3 on the switch.

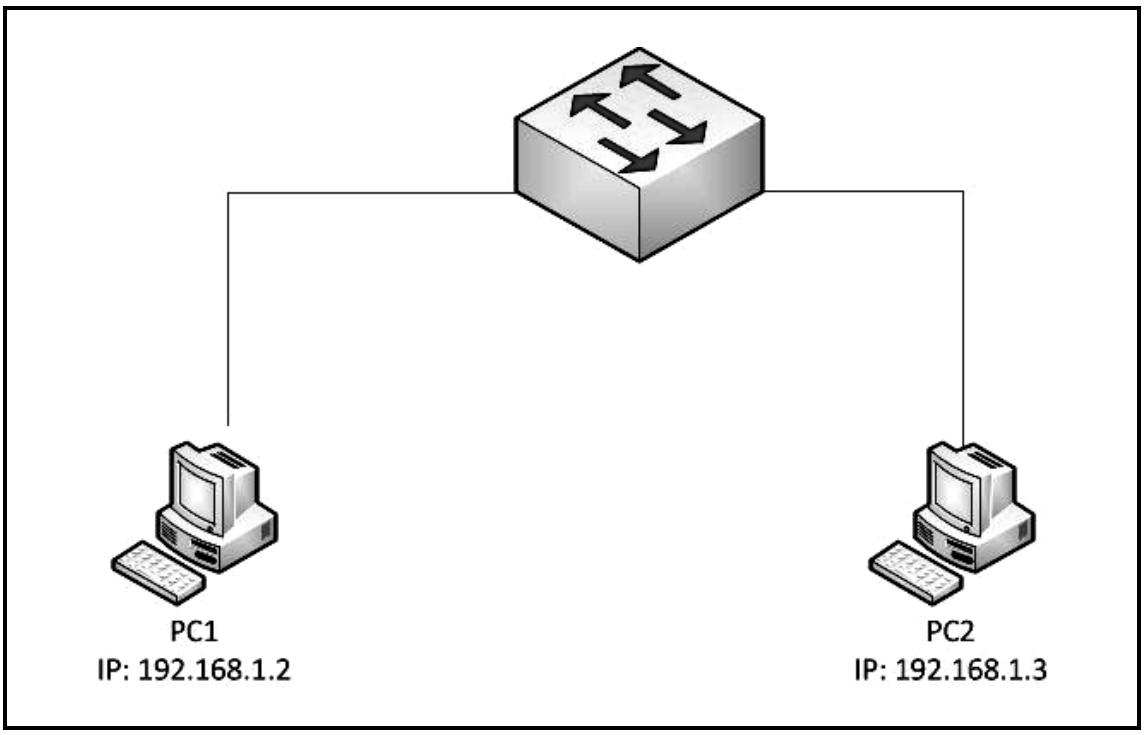

FIGURE 2

4.2.1 Which TWO addresses of PC2 are required if PC1 needs to communicate with PC2? (2)

4.2.2 Is a router required for PC1 to communicate with PC2? Substantiate the answer. (2)

[16]

QUESTION 5

5.1 List EIGHT steps to follow when installing software from the network on a Windows 7 machine. (8)

5.2 Explain the structure of a network security system. (8)
[16]

QUESTION 6

6.1 You are providing network support for a company in your area. They ask for your assistance when a single workstation is displaying the 'No internet' message when opening a web browser. The other workstations can access the internet with no issues.

How would you troubleshoot the problem? (5)

6.2 Give full name and definition of ACL. (3)

6.3 Differentiate between a *point-to-point topology* and a *full-mesh network topology*. (4)

6.4 List SIX tasks performed by a network administrator. (6)
[18]

QUESTION 7

7.1 Differentiate between a user profile, a roaming user profile and a mandatory user profile. (6)

7.2 List FIVE tasks that must be completed once a network application has been installed. (5)

7.3 Identify EIGHT things you need to take into consideration before or during the actual installation of a LAN. (8)

7.4 Name THREE things that a change management plan helps you to achieve. (3)
[22]

TOTAL SECTION B: 110

GRAND TOTAL: 150

Copyright reserved