higher education & training

Department:
Higher Education and Training
REPUBLIC OF SOUTH AFRICA

NATIONAL CERTIFICATE (VOCATIONAL)

INTRODUCTION TO INFORMATION SYSTEMS
NQF LEVEL 2

(10041002)

8 December 2020 (X-paper)
09:00–12:00

REQUIREMENTS: **Pen, pencil and a ruler**

This question paper consists of 9 pages.

431Q1N2008

Copyright reserved

TIME: 3 HOURS
MARKS: 200

INSTRUCTIONS AND INFORMATION

1. Answer all the questions.
2. Read all the questions carefully.
3. Number the answers according to the numbering system used in this question paper.
4. Start each section on a new page.
5. Use only a black or blue pen.
6. Write neatly and legibly.

Copyright reserved

SECTION A

QUESTION 1

1.1 Various options are provided as possible answers to the following questions. Choose the answer and write only the letter (A–D) next to the question number (1.1–1.10) in the ANSWER BOOK.

1.1.1 Employee grievances should be handled by …

A senior management.
B middle management.
C lower management.
D shareholders.

1.1.2 A manager's first step towards making a decision should be to …

A gather information.
B evaluate outcomes.
C define the problem.
D brainstorm solutions.

1.1.3 The aim of the … should be that all components work together as one.

A information system
B knowledge base
C terminal
D transactional processing system

1.1.4 Physical controls to protect a workstation include …

A passwords.
B file permissions.
C security doors.
D firewalls.

1.1.5 … encrypts data on a system, thereby preventing users from accessing information.

A A Trojan
B Rootkits
C Logic bombs
D Ransomware

Copyright reserved

1.1.6 A … is built on a wooden frame with beads which can be moved into different positions to assist the user with counting.

A Stylus
B Abacus
C Punch card
D Typewriter

1.1.7 One binary digit is called a …

A kilobyte.
B bit.
C megabyte.
D gigabyte.

1.1.8 Digital audio can be output through a …

A monitor.
B printer.
C speaker.
D microphone.

1.1.9 Optical character recognition is used to convert scanned … so that it/they can be edited.

A images to text
B text into a document
C barcodes to prices
D documents to images

1.1.10 The numeric keypad can be activated by pressing the … key.

A Esc
B Tab
C Caps lock
D Num lock

(10 × 1) (10)

1.2 Complete the following sentences by using the words provided in the list below. Write only the word(s) next to the question number (1.2.1–1.2.10) in the ANSWER BOOK.

input; users; operations; transact; optical; viruses; retrieval; survey; computer; smart

1.2.1 A … can be used by an organisation to conduct a needs analysis for its employees.

1.2.2 It is necessary for the … of the information system to provide feedback during development.

1.2.3 Information systems support business … by allowing managers to monitor business processes.

1.2.4 … can be hidden in links on e-mail attachments.

1.2.5 Users are able to … from any part of the world through e-commerce.

1.2.6 A solid-state drive has no moving parts; therefore data … is faster on a solid-state drive than on a hard-disk drive.

1.2.7 A … is an electronic device used to receive, process and store data.

1.2.8 … assists in ensuring accuracy of data by checking for errors.

1.2.9 Data is stored on an … disk by using laser beams to write to it.

1.2.10 A … terminal has a built-in processor and its own memory.

(10 × 1) (10)

1.3 Indicate whether the following statements are TRUE or FALSE. Choose the answer and write only 'true' or 'false' next to the question number (1.3.1–1.3.10) in the ANSWER BOOK.

1.3.1 An information system should be able to share data between those authorised to access it.

1.3.2 Information systems assist managers in gathering data to assist with decision-making.

1.3.3 A knowledge base is used as an off-site back-up utility.

1.3.4 Antivirus programs can be set to automatically update virus definitions.

1.3.5 Computers can only be used for typing letters to clients.

1.3.6 A sewing machine is an example of an electromechanical computing device.

1.3.7 Timesharing mode allows users to carry out processing together.

1.3.8 Computers allow people all over the world to connect by using the Internet.

1.3.9 A mobile printer needs a technician with specialised training to operate it.

1.3.10 Computers that generate larger amounts of information can use more than one hard drive to save data.

(10 × 1) (10)

1.4 Choose a/an word/item from COLUMN B that matches a description in COLUMN A. Write only the letter (A–J) next to the question number (1.4.1–1.410) in the ANSWER BOOK.

COLUMN A		COLUMN B	
1.4.1	A process of organising and coordinating the activities of a business in order to achieve specific objectives	A	design factors
1.4.2	A formal system designed to collect, process, store and distribute information	B	software piracy
1.4.3	Factors that need to be considered when designing an information system	C	storage devices
1.4.4	Illegal downloading of copyright material	D	computer terminal
1.4.5	Ideas or concepts that are the result of an individual's creativity	E	TV tuner card
1.4.6	Peripheral devices that are used to store data and information	F	intellectual property
1.4.7	An electronic device used mainly to input and display data	G	dot-matrix printer
1.4.8	A type of printer that uses a carbon ribbon to create text on a page	H	information system
1.4.9	A device used to enter instructions into a computer	I	input device
1.4.10	A device that allows users to view media from external sources, such as television, on their computer	J	management

(10 × 1) (10)

1.5 What does each of the following acronyms stand for? Write only the word(s) next to the question number (1.5.1 – 1.5.10) in your ANSWER BOOK.

1.5.1 HR

1.5.2 IT

1.5.3 AI

Copyright reserved

1.5.4 MAC

1.5.5 DAC

1.5.6 WWW

1.5.7 DRAM

1.5.8 MFP

1.5.9 CRT

1.5.10 GPU

(10 × 1) (10)
[50]

TOTAL SECTION A: 50

SECTION B

QUESTION 2

2.1 Describe what is meant by the term *core function*. (2)

2.2 Identify the core function of the TVET college where you are currently studying. (2)

2.3 Identify THREE departments that provide support functions in your college. (3 × 2) (6)

2.4 List TWO functions management performs in the college you attend. (2 × 2) (4)

2.5 Provide TWO examples of operational decisions a campus manager would make. (2 × 2) (4)

2.6 Discuss how experience can assist a manager in making a decision. (2 × 2) (4)
[22]

QUESTION 3

3.1 Summarise how data input into a system progresses into knowledge gained by the user. (4)

3.2 State TWO ways a knowledge base can assist employees with their job. (2 × 2) (4)

3.3 Justify the need for software as an element of an information system. (2 × 2) (4)

Copyright reserved

3.4 Name FIVE elements of an information system apart from software. (5)

3.5 Suggest TWO ways that an information system could be made user friendly. (4)

3.6 Identify a role an information system plays in a business. (2)
[23]

QUESTION 4

4.1 Draw AND label the configuration of a centralised information system. (6)

4.2 Give TWO reasons why a management information system should be implemented in an organisation. (4)

4.3 Advise how you would protect a computer network from external threats, such as hackers. (2 × 2) (4)

4.4 Name TWO subcategories of internal threat an organisation could face. (4)

4.5 Explain how a flash disk can infect computers with a virus. (2 × 2) (4)

4.6 List the full web address of any TWO South African websites that you can purchase goods from. (4)

4.7 State TWO ways you can personally assist in combating software piracy. (4)
[30]

QUESTION 5

5.1 Summarise how addition of two numbers would be performed on an abacus. (4)

5.2 Describe the term *electromechanical computing device*. (2)

5.3 Name an electromechanical computing device used in the early days of computing. (2)

5.4 Identify THREE electronic devices which are portable and can be used to aid productivity. (3)

5.5 Highlight any TWO characteristic differences between *first-generation* and *second-generation* computers. (4)

5.6 List TWO examples of pervasive computing you would find in a grocery store. (4)

5.7 Recommend TWO applications that can be used to send instant messages to someone who is overseas. (4)
[23]

Copyright reserved

QUESTION 6

6.1 Tabulate TWO advantages and TWO disadvantages of computer processing. (8)

6.2 Study the diagram below.

DIAGRAM A: MOTHERBOARD PORTS

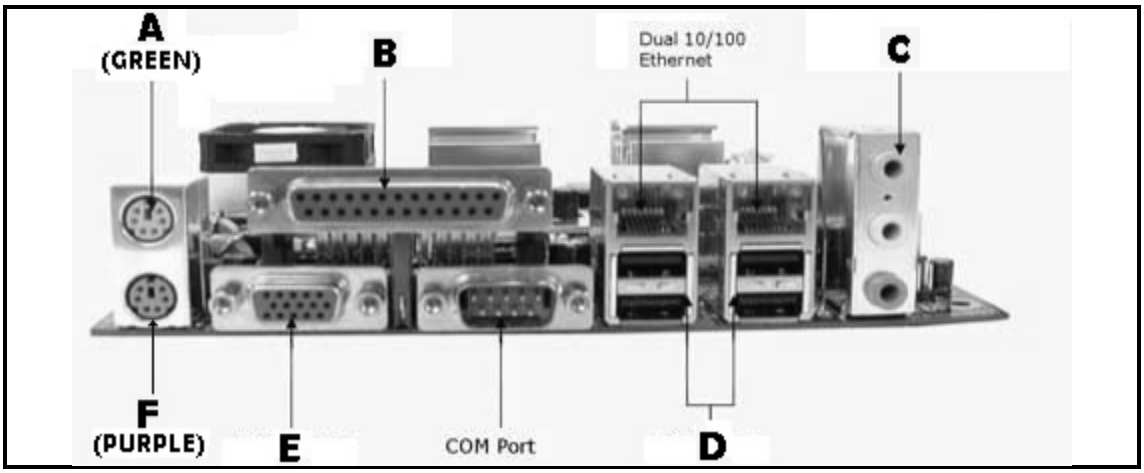

[Source: *https://computer-systems.weebly.com/*]

Identify the ports labelled A–F. (12)

6.3 Outline the purpose of having addressable locations for data in memory. (4)

6.4 Name the standard keyboard layout used for computers in South Africa. (2)

6.5 Suggest a device that can be used as an alternative to the standard keyboard found on a smartphone. (2)

6.6 State the key combination used to insert a percentage symbol on a standard computer keyboard. (2)

6.7 Point out TWO examples of how you would design a system to ensure accuracy when capturing data. (4)

6.8 List TWO examples of an impact printer. (4)

6.9 State an advantage of using an impact printer instead of a laser printer. (2)

6.10 Propose THREE uses for virtual reality (VR) headsets to enhance learning at your college. (6)

6.11 Name a device that can be used to give a presentation to 100 people. (2)

6.12 Recommend TWO uses for a CD-RW disc. (4)
[52]

TOTAL SECTION B: 150
GRAND TOTAL: 200

Copyright reserved