higher education & training

Department:
Higher Education and Training
REPUBLIC OF SOUTH AFRICA

MARKING GUIDELINE

NATIONAL CERTIFICATE (VOCATIONAL)

INTRODUCTION TO COMPUTERS L2

8 December 2020

This marking guideline consists of 8 pages.

Copyright reserved

MARKERS MUST USE THEIR OWN DESCRETION

QUESTION 1

1.1 1.1.1 **Logic** is a method of reasoning that involves a series of statements, each of which must be true if the statement before it is true.

OR

Logic is the way of thinking and reasoning about things that is characteristic of a particular type of person or particular field of activity. (1 × 2) (2)

1.1.2 To think logically is to think in steps where logical thinking skills mean incorporating logic into one's thinking process whenever analysing a problem on order to come up with a solution. (1 × 2) (2)

1.2 A- AND GATE
B- OR GATE (2)

1.3

Gate A		
X	Y	Z
0	0	0
0	1	0
1	0	0
1	1	1

✓ ✓ ✓

Gate B		
X	Y	Z
0	0	0
0	1	1
1	0	1
1	1	1

✓ ✓ ✓

(3 × 2) (6)

1.4 A- X.Y=Z ✓✓

B- X+Y=Z ✓✓ (2 × 2) (4)

1.5

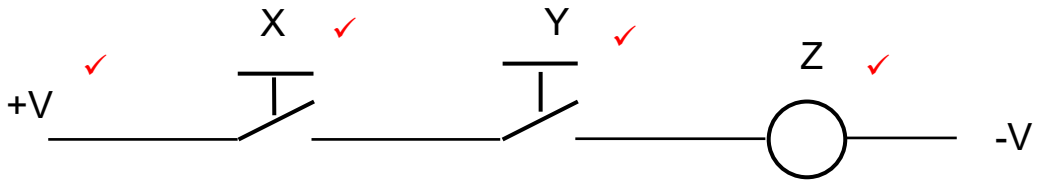

(4 × 1) (4)

1.6

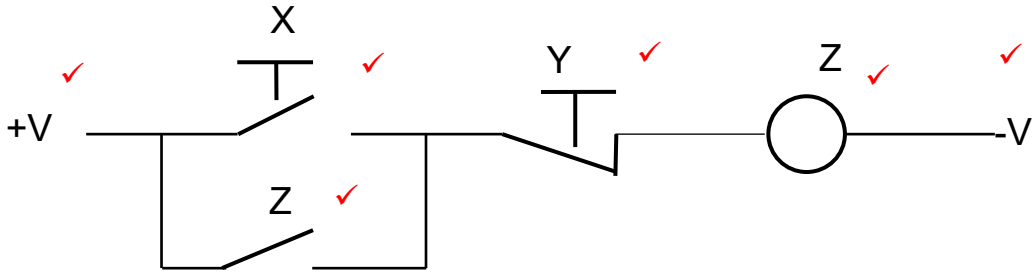

(6 ×1) (6)

Copyright reserved

1.7

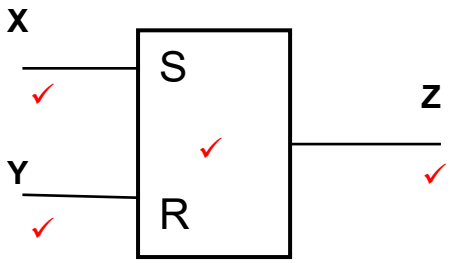

(4 × 1) (4)
[30]

QUESTION 2

2.1
- Sensors
- Keyboards
- Mouse
- Scanners
- Cameras

(Any 3 × 1) (3)

2.2
- Industrial robot systems
- CNC machine tools
- Monitors
- Printers
- Plotters

(Any 3 × 1) (3)

2.3
- Automated conveyor belts
- Industrial robot applications
- CNC Machine tools

(Any 3 × 1) (3)

2.4

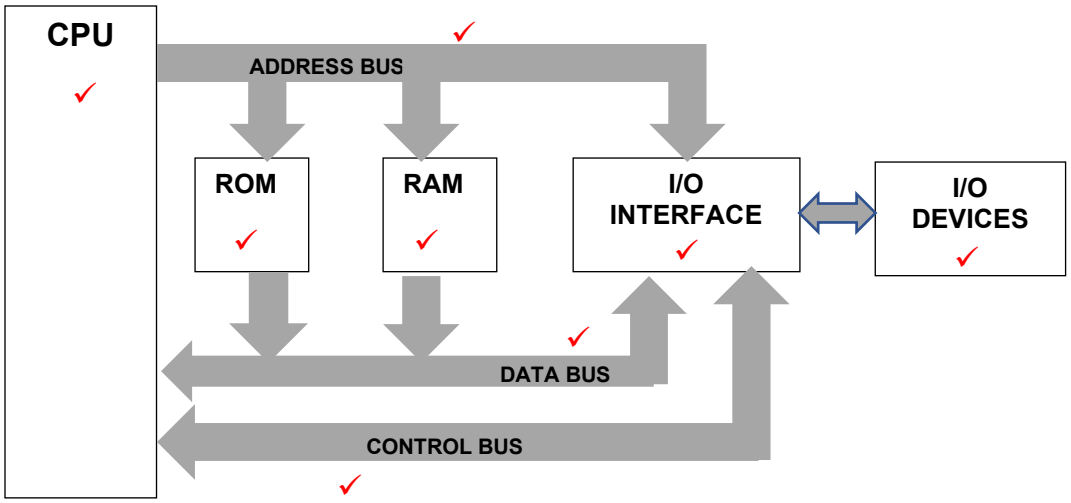

(8 × 1) (8)

2.5 **Processing** is a series of actions (steps) to achieve a desired result

Control is the ability to make decisions about how something is managed or done. (2 × 2) (4)

2.6

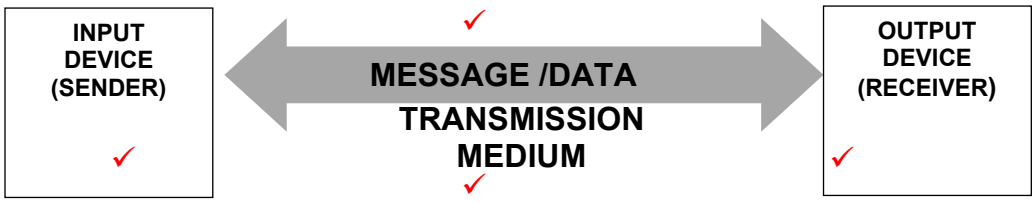

Marker to use discretion

(4 × 1) (4)
[25]

QUESTION 3

3.1 3.1.1 Blank monitor screen –

- Check the supply to the monitor
- Check the monitor and computer connection problem
- Check to see if monitor has not failed (3 × 1) (3)

3.1.2 Set the Power management settings on the BIOS setup. . (1)

3.2

- Find the file you want,
- right-click,
- select copy,
- navigate to where you want to place the file,
- right-click again and
- select paste

OR

- Find the file you want,
- right-click,
- select send to and
- then choose your destination (Any 4 × 1 within the same group) (4)

3.3

- Remove temporary internet files
- Remove downloaded program files
- Empty the Recycle Bin
- Remove windows temporary files
- Remove optional windows components that you are not using
- Remove installed programs that you no longer use
- Compress file that have not been accessed over a set period

(Any 4 × 1) (4)

3.4 3.4.1

- Out of paper
- Ink finished
- Loose cable connection
- No power – faulty plug, cable or switch (4 × 1) (4)

3.4.2
- Replenish paper in paper tray
- Replace ink cartridge
- Refit and tighten connection
- Restore power by repairing faulty plug, cable or switch

(4 × 1) (4)

3.5 **Heat**: A computer will under-perform at high temperature. ✓

Dust: Creates wear and tear on the most sensitive parts of the motherboard, memory and CPU. ✓

Magnets: They are very bad for the computer. If you store data from the hard drives on a magnetic tape and the tape is exposed to a magnet, you could over-write all your data and permanently damage the tape.

OR

If the CRT magnetic layer is exposed to a magnet, this will permanently alter the colours and image of your display.✓ ANY ONE

Power surges: Blow computer components and burn parts of the wiring on the motherboard. ✓

Electro-static: Damages the electronic components in your computer.✓

(5 × 1) (5)

[25]

QUESTION 4

4.1 Step 1: Click on the Microsoft Office button and select open.
Step 2: From the menu, navigate to the file that you want to open.
Step 3: Once selected, click on open. (3 × 1) (3)

4.2
- Marketing of products
- Demonstrations of products
- Training of employees and workers
- Displaying charts or tables indicating sales Figures, Profits, Market shares or other financial or statistical figures
- Presentation of lectures and lessons
- Presentation of ideas in a brainstorming session
- Creation of certificates
- Presentation of a business or market plan
- Presentation of mission statement
- Conferences, seminars etc. (Any 1 × 1) (1)

4.3
- Programmable Logic Controller (PLC) application software
- Industrial Robot (IR) application software
- Computer Numerical Control (CNC) application software (3 × 1) (3)

Copyright reserved

4.4 STEP 1: Click on *the Microsoft Office Word Help* button, or
STEP 2: Press the *F1* key
STEP 3: Click on the *Browse Word Help* key words or enter your own key words in the search field. (3 × 1) (3)
[10]

QUESTION 5

5.1 E-mails are important to the mechatronic person when working with Mechatronic automated applications as the system log can be E-mailed to the various mechatronic system suppliers when an error occurs the error is analysed and a solution is returned via E-mail (1 × 2) (2)

5.2 5.2.1 ISP – Internet Service Provider (1)

5.2.2 www – World Wide Web. (1)

5.2.3 http – Hypertext Transport Protocol (1)

5.3
- bbyte – Username
- telkomsa – ISP domain
- .net – identifier for country, commerce etc (3 × 1) (3)

5.4
- Bing
- Google chrome
- Yahoo
- Google .com (Any24 × 1) (2)

[10]

TOTAL: 100

Copyright reserved