higher education & training

Department:
Higher Education and Training
REPUBLIC OF SOUTH AFRICA

MARKING GUIDELINE

NATIONAL CERTIFICATE

LOGIC SYSTEMS N6

22 November 2024

This marking guideline consists of 8 pages.

Copyright reserved

QUESTION 1

1.1 False:✓ Cell phone switching use digital technology.✓

1.2 False:✓ The bus is internal inside the computer.✓

1.3 False:✓ Computers can also accept digital data directly, for instance, USB input reading digital storage data from a memory stick.✓

1.4 False:✓ Data is read from memory where it was stored. ✓

1.5 False:✓ The instruction register holds the instruction which is currently being executed by the computer.✓

1.6 True:✓ The program counter contains the memory address of the next instruction to be executed.✓

1.7 False:✓ The control unit and access to memory and all CPU operations are synchronised to the system clock-oscillator.✓

1.8 True:✓ Both machine code and assembler are low-level languages and are non-portable and used on a specific machine.✓

1.9 False:✓ The accumulator temporarily stores the on-going computational outputs from the ALU.✓

1.10 True:✓ A micro-instruction is the smallest operation which a computer can perform. The computer breaks up instruction into micro-instructions, which are issued to various parts of the micro-processor.✓

(10 × 2) **[20]**

QUESTION 2

2.1

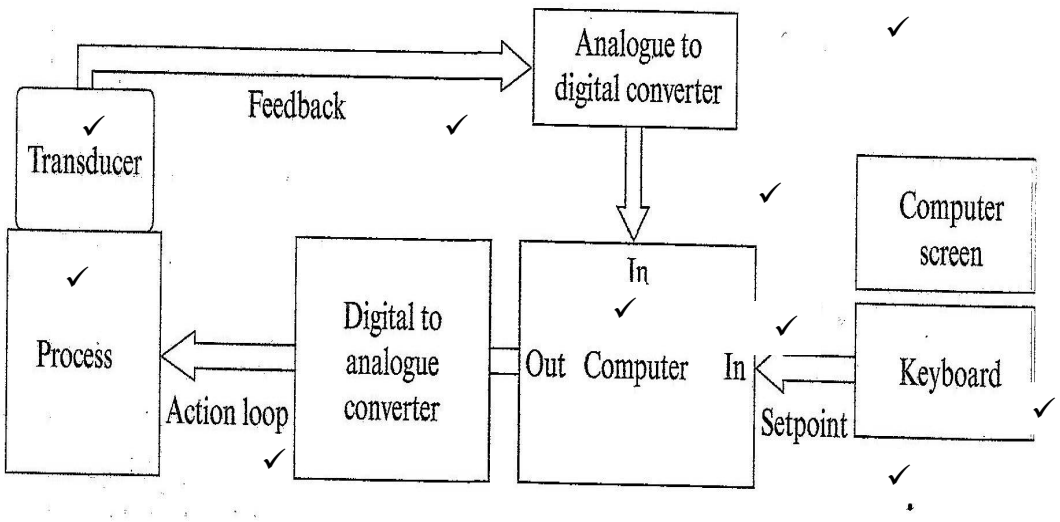

(10)

2.2

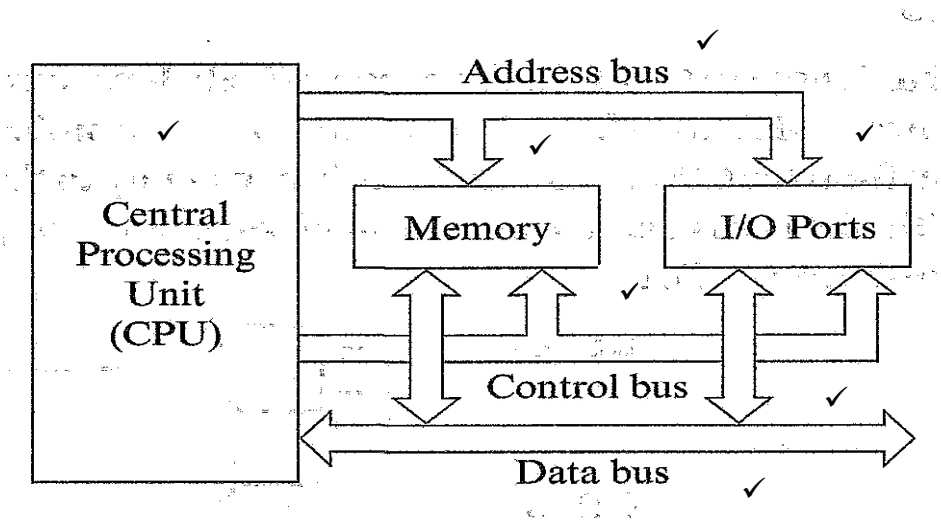

- Address Bus✓
- Data Bus✓
- Control Bus✓

(Any other correct diagram accepted) (10)
[20]

QUESTION 3

3.1

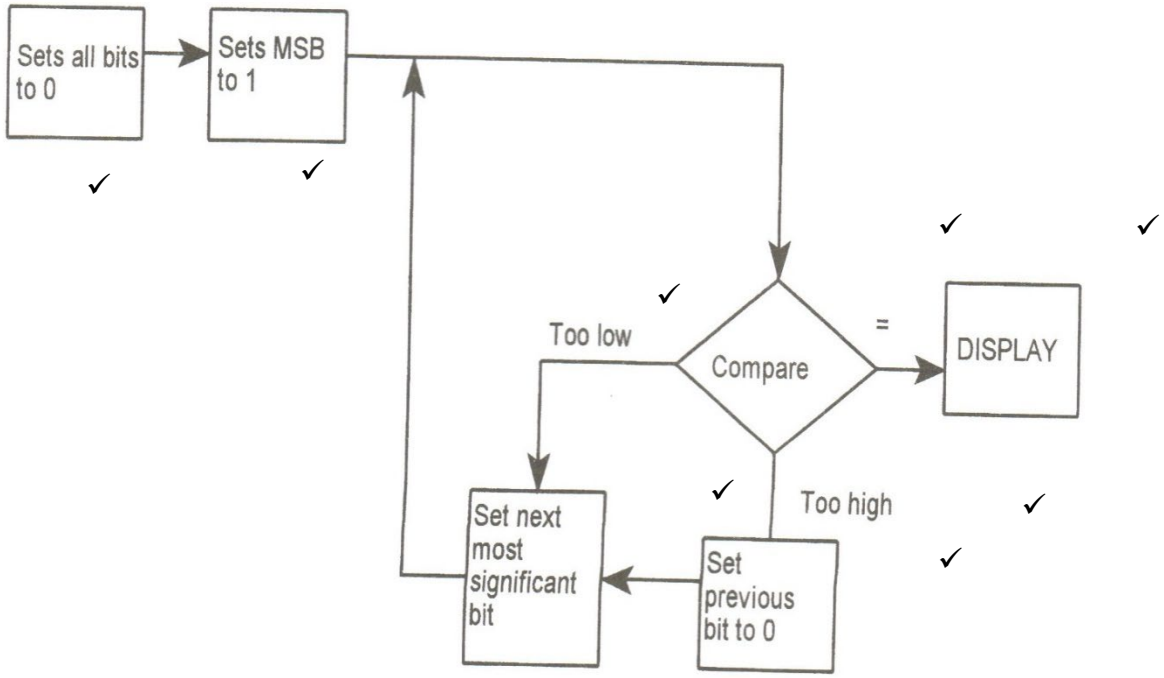

(8)

3.2 3.2.1

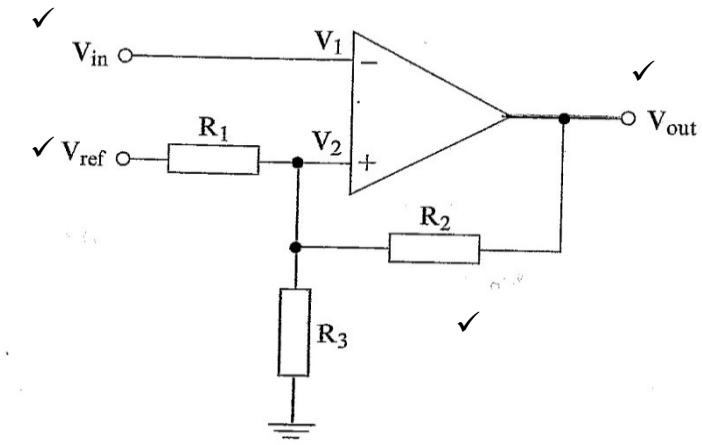

Schmitt Trigger (4)

3.2.2 TRIP LEVELS

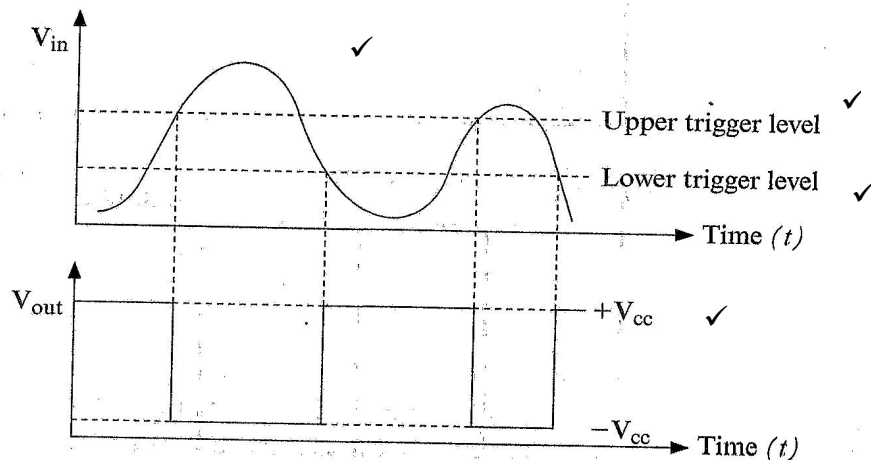

(4)

3.2.3 SCHMITT TRIGGER
PRINCIPLE OF OPERATION:

1. Input is Vin + Feedback loop✓
2. Feedback factor $B = \frac{R_1}{R_1 + R_2}$ ✓
3. $V_1 < V$
4. V reference varies
5. $V_1 = \left(\frac{R_1}{R_1 + R_2}\right) \quad V_R + \beta V_0$ ✓
6. V_1 is lowered to V_2
7. Pulse output✓ (4)

[20]

QUESTION 4

4.1 CONSTRUCTION OF A DIGITAL MULTIMETER USED IN LARGE-SCALE INTEGRATION

The trend has been towards more and more integration around micro-processor functions (i.e., digital processing). Hybrid circuits use operational amplifiers (particularly for input functions) as well as digital control. Despite the mix-and-match construction designs of the major manufacturers (which blur the classification somewhat) the following can be accepted as a guideline for LSI and VLSI multimeter construction:

INPUT CIRCUITS

Sensing and Shunting and Safety

Use is made here of ANALOGUE construction designs and operational amplifiers are used.✓✓

Attenuation Amplification Filtering (2)

Functions here are still op-amp based (i.e., ANALOGUE). The trend is to use DIGITAL SWITCHING FUNCTIONS from the microprocessor (Digital Logic Switching) to activate these circuits. The resultant mix-and-match of digital and analogue functions are called HYBIRD circuits. The new trend is to extend the range of the micro-processor to take care of all these functions.✓✓✓

PROCESSING CIRCUITS (3)

Processing circuits are based on a MICRO-PROCESSOR (digital logic designs). As the power of 'embedded' (i.e., real-time) processing grows, more and more jobs (i.e., functions) are taken over by the micro-processor. This includes filtering, amplification and attenuation making these functions software defined.✓✓✓

(3)

OUTPUT CIRCUITS

These are today digitally controlled by the user via choices offered by the micro-processor. Outputs can be in USB or RS232 or other digital formats.✓✓ (2)

4.2 **Dual slope ADC**

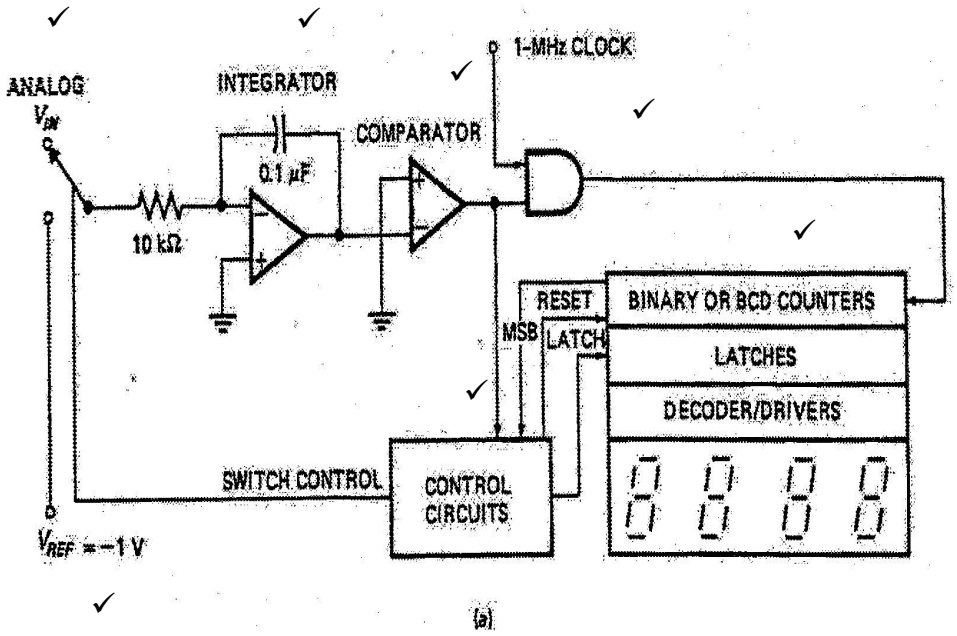

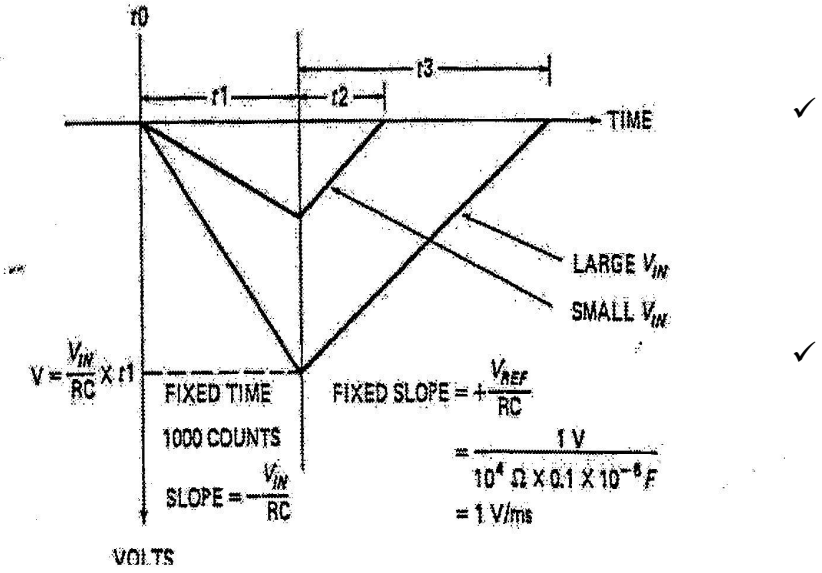

There is no requirement to show the calculations. (10)
[20]

QUESTION 5

5.1 z = wt + x – 2y
z = w.t + x –y – y✓

INSTRUCTION LOCATION	INSTRUCTION WORD		DESCRIPTION
	OP-CODE	ADDRESS	
CAAA	LOAD	E1C6	Load w✓
CAAB	MULT	E1C3	Multiply by t✓
CAAC	BRAP	CAB5✓	Branch if Acc. > 0✓
CAAD	ADDA	E1C7	Add x ✓
CAAE	BRAP	CAB5	Branch if Acc. > O
CAAF	SUBT	E1C8	Subtract y✓
CAB0	BRAP	CAB5	Branch if Acc. > O
CAB1	SUBT	E1C8	Subtract y✓
CAB2	BRAP	CAB5	Branch if Acc. > O
CAB3	STOR	E1C9	Store result in z✓
CAB4	OUTP		Output result
CAB5	HALT		Stop operation✓

NOTE: Other correct programming sequences are also accepted.
Either w or t can be loaded first. (10)

5.2 5.2.1 Hardware interrupts

External devices and peripherals connected to the computer system can issue hardware interrupts by sending interrupt signals in asynchronous mode to the CPU.
After reception and subsequent acknowledgement of the interrupt signal, the processor will then execute an interrupt service routine (ISR) issued by the hardware.✓✓✓✓

Hardware interrupts can be divided into vectored and non-vectored interrupts.

Vectored interrupts cause the processor to automatically branch to the specific address in response to the interrupt request.✓✓

With non-vectored interrupts, the address of the interrupt service routine is given externally by the device issuing the request.✓✓ (8)

5.2.2 Software interrupts

Software interrupts are program-driven instructions which are inserted at desired locations in a specific program.✓

When a software interrupt is executed in the program, the processor executes an interrupt service routine (ISR) contained in software as part of the program.✓ (2)
[20]

TOTAL: 100

Copyright reserved