higher education & training

Department:
Higher Education and Training
REPUBLIC OF SOUTH AFRICA

MARKING GUIDELINE

NATIONAL CERTIFICATE

INDUSTRIAL ELECTRONICS N2

18 November 2024

This marking guideline consists of 7 pages.

Copyright reserved

QUESTION 1: GENERAL

1.1 M
1.2 E
1.3 A
1.4 K
1.5 C
1.6 H
1.7 B
1.8 D
1.9 J
1.10 F

(10 × 1) **[10]**

QUESTION 2: DIRECT-CURRENT THEORY

2.1

$$R_{P1} = \frac{R_1 \times R_2}{R_1 + R_2}$$

$$R_P = \frac{10 \times 20}{10 + 20} \checkmark$$

$$R_{P1} = 6.667\ \Omega \checkmark$$

$$\frac{1}{R_{p2}} = \frac{1}{R_3} + \frac{1}{R_4} + \frac{1}{R_5}$$

$$\frac{1}{R_{p2}} = \frac{1}{15} + \frac{1}{15} + \frac{1}{25} \checkmark$$

$$R_{p2} = \frac{1}{0.1734}$$

$$R_{p2} = 5.767\ \Omega \checkmark$$

$$R_{s1} = R_{p2} + R_{p1}$$

$$R_s 1 = 5.767 + 6.667 \checkmark$$

$$R_{s1} = 12.434\ \Omega \checkmark$$

$$R_{p3} = \frac{R_6 \times Rs_1}{R_6 + R_{s1}}$$

$$R_{p3} = \frac{30 \times 12.434}{30 + 12.434} \checkmark$$

$$R_{p3} = 8.791\ \Omega \checkmark$$

$$R_t = R_7 + R_{p3}$$

$$R_s = 30 + 8.791 \checkmark$$

$$R_{s2} = 38.791\ \Omega \checkmark$$ (10)

2.2 $I_T = \frac{V_T}{R_T}$

$I_T = \frac{50}{38.791}$ ✓

$I_T = 1.289\ A$ ✓ (2)

2.3 $V_{R7} = I_T \times R_7$

$V_{R7} = 1.289 \times 30$ ✓

$V_{R7} = 38{,}67\ V$ ✓ (2)

2.4 $I_1 = \frac{V_{Rp}}{R_6}$ **OR** $I_1 = \left(\frac{R_{S1}}{R_{S1}+R_6}\right) I_T$

$I_1 = \frac{11.332}{30}$ ✓ $I_1 = \left(\frac{12.434}{12.434+30}\right) 1{,}289$

$I_1 = 0.378\ A$ ✓ $I_1 = 0.378\ A$

$I_2 = \frac{V_{Rp}}{R_{S1}}$ **OR** $I_2 = I_T - I_1$ **OR** $I_2 = \left(\frac{R_6}{R_{S1}+R_6}\right) I_T$

$I_2 = \frac{11.332}{12.434}$ ✓ $I_2 = 1{,}289 - 0.378$ $I_2 = \left(\frac{12.434}{12.434+30}\right) 1{,}289$

$I_2 = 0.911\ A$ ✓ $I_2 = 0.911\ A$ $I_2 = 0.911\ A$ (4)

2.5 $P_T = V \times I$ **OR** $P_T = I_T^2 \times R_T$ **OR** $P_T = \frac{V^2}{R_T}$

$P_T = 50 \times 1.289$ ✓ $P_T = 1.289^2 \times 38.67$ $P_T = \frac{50^2}{38.67}$

$P_T = 64.45\ W$ ✓ $P_T = 64.251\ W$ $P_T = 64.65\ W$ (2)

[20]

QUESTION 3: ALTERNATING CURRENT THEORY

3.1 3.1.1 π/4 **OR** 0,785
3.1.2 180°
3.1.3 225°
3.1.4 5π/3 **OR** 5,236
3.1.5 330°

(5 × 1) (5)

3.2 3.2.1 $R = \frac{V_R}{I_T}$

$R = \frac{120}{4}$ ✓✓

$R = 30\ \Omega$ ✓ (3)

3.2.2 $X_L = \frac{V_L}{I_T}$

$X_L = \frac{220}{4}$ ✓

$X_L = 55\ \Omega$✓

$L = \frac{X_L}{2\pi f}$

$L = \frac{55}{2\pi(50)}$ ✓

$L = 0.175\ H$✓ (4)

3.2.3 $X_c = \frac{V_c}{I_T}$

$X_c = \frac{160}{4}$ ✓

$X_c = 40\ \Omega$ ✓

$C = \frac{1}{2\pi f X_C}$

$C = \frac{1}{2\pi(50)(40)}$ ✓

$C = 79.577 \times 10^{-6} f$ ✓ (4)

3.2.4 $Z = \sqrt{R^2 + (X_L - X_C)^2}$ ✓

$Z = \sqrt{(30)^2 + (55 - 40)^2}$ ✓ ✓

$Z = 33.541\ \Omega$ ✓ (4)

[20]

QUESTION 4: SEMICONDUCTOR DIODES

4.1

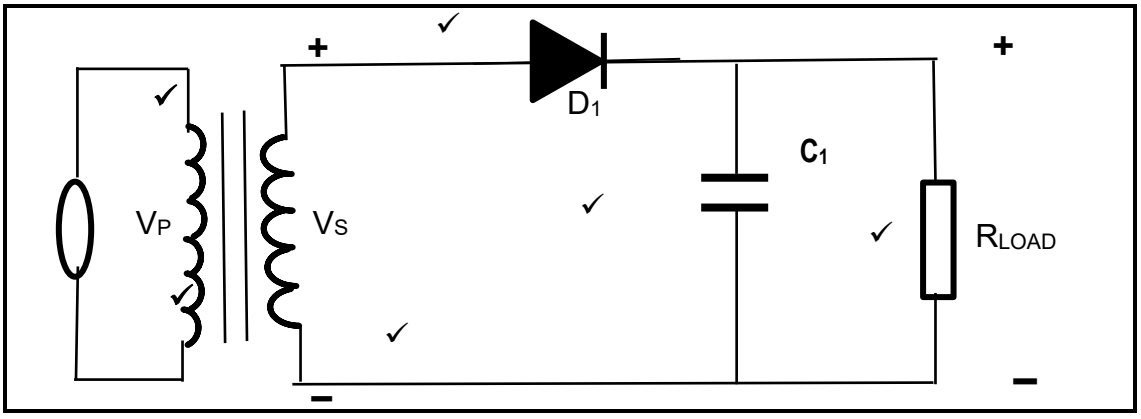

(6)

4.2
- During the positive half-cycle, D1 is forward biased ✓
- and during the negative half-wave, D1 is reverse-biased.✓
- The presence of the smoothing capacitor alters the condition under which the rectifier diode conducts. When the diode is forward-biased, the capacitor C_1 charges up to the peak value of the input wave (Vm).✓
- During the reverse bias (negative half-cycle),✓
- the diode is reverse-biased✓
- and the supply is effectively disconnected from the load leaving the capacitor as the only source of voltage. The capacitor now discharges into the load and a ripple appears in the voltage across the load.✓

(marker to use discretion) (6)

4.3
- Optical encoders
- Security systems
- High-voltage isolators
- Level indicators
- Alphanumeric displays (5)

[17]

QUESTION 5: TRANSISTORS AND DECIBEL

5.1

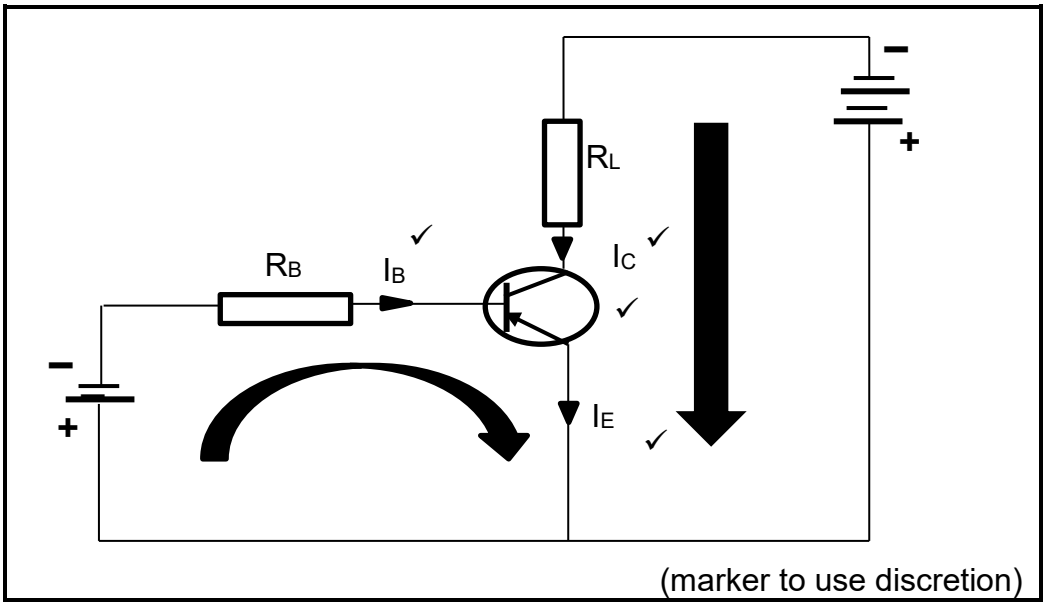

(marker to use discretion) (4)

5.2

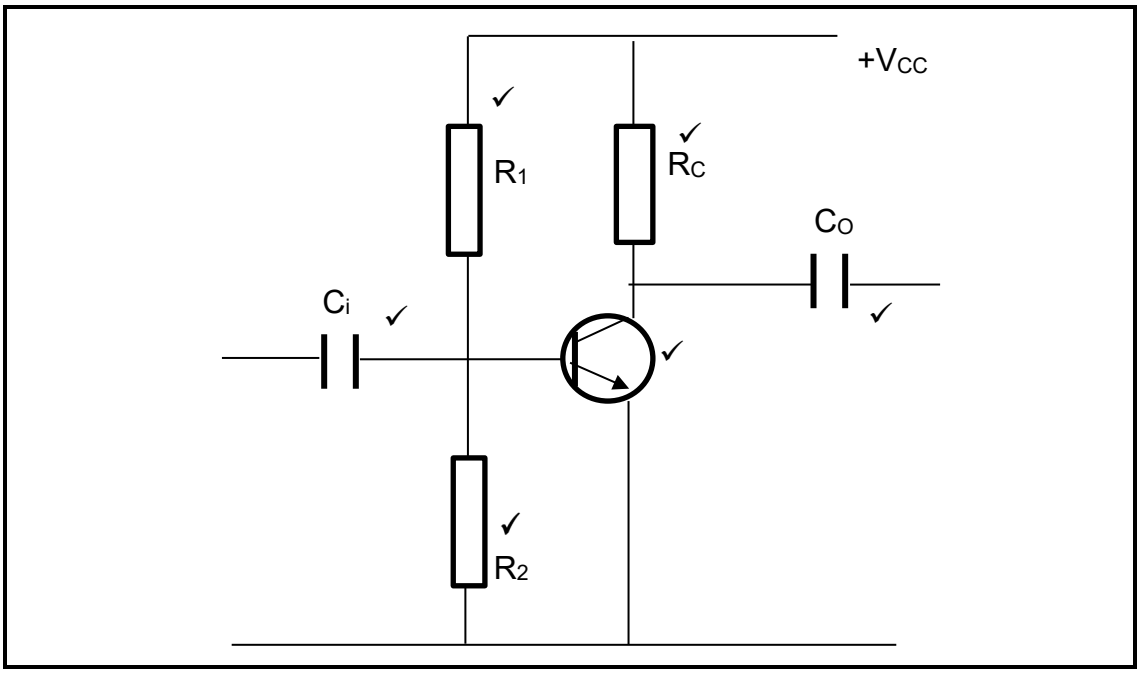

(6)

5.3 5.3.1 No phase shift between input and out
5.3.2 180° phase shift between input and output
5.3.3 0° phase shift between input and output

(3 × 1) (3)

5.4 Av = 20 log Vo / Vi

Av = 20 log 6 /120 × 10^{-3}✓

= 33.979 dB✓ (2)

[15]

QUESTION 6: MEASURING INSTRUMENTS, TRANSDUCERS AND SYNCHROS

6.1 6.1.1

$$R_{SH} = \frac{I_M \times R_M}{I \quad - I_M}$$

$$R_{SH} = \frac{10 \times 10^{-3}(5)✓}{2 - 10 \times 10^{-3}✓}$$

R_{SH} = 25 mΩ ✓✓ (4)

6.1.2

$$= \frac{V}{I_M} - R_M$$

$$R_{se} = \frac{12✓}{10 \times 10^{-3}} - 5✓$$

$$R_{se} = 1.195\ k\Omega\ ✓✓$$ (4)

6.2

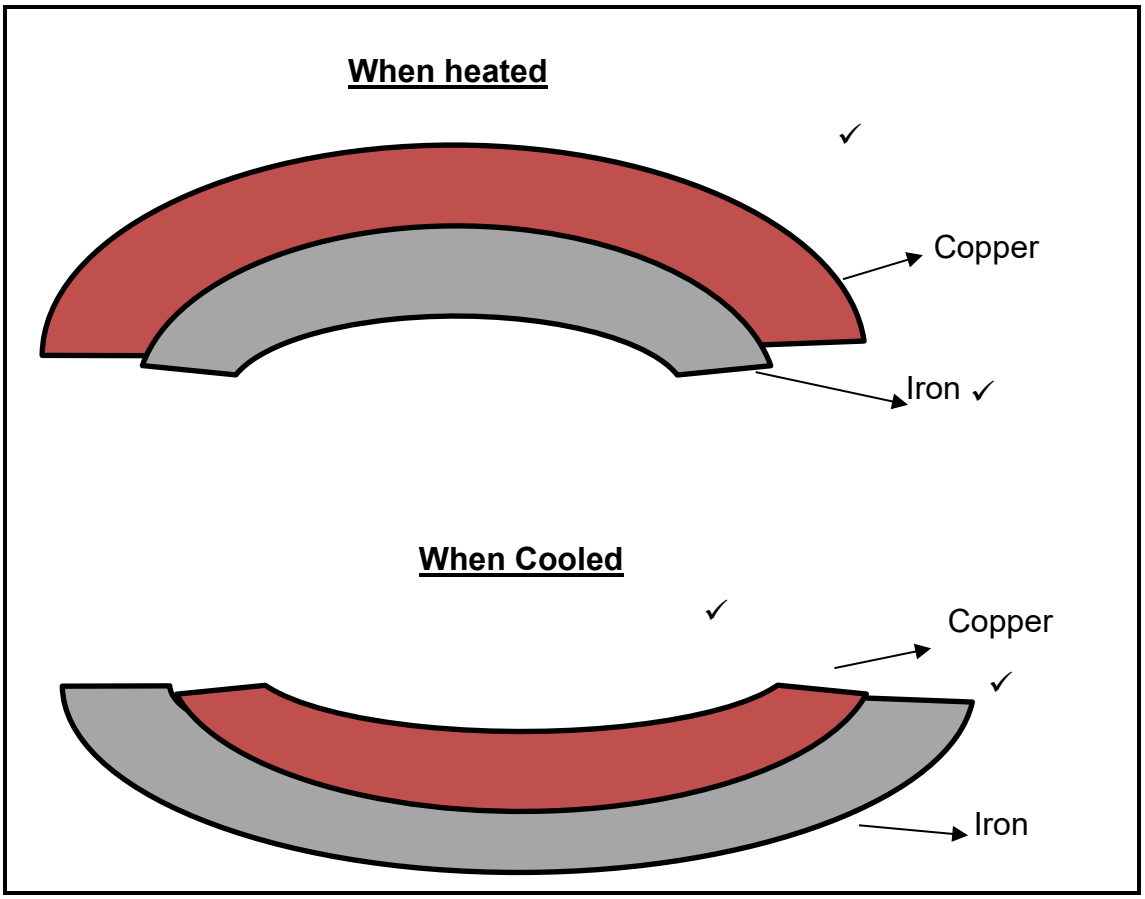

(4)

6.3 A synchro system synchronises two or more devices so that they operate at the same time over long distances by means of an electrical signal. (2)

6.4
- Rapid and accurate transmission of information between equipment and stations.
- Changes in the speed and depth of torpedoes.
- Remote control of model cars or model aeroplanes.
- Remote positioning of communication systems.
- Controlling the course, speed and a range of targets or missiles.
- Angular displacement or position of a ship's rudder. (Any 4 × 1) (4)

[18]

TOTAL: 100

Copyright reserved