higher education & training

Department:
Higher Education and Training
REPUBLIC OF SOUTH AFRICA

NASIENRIGLYN

NASIONALE SERTIFIKAAT

INGENIEURSWETENSKAP N4

25 November 2024

Hierdie nasienriglyn bestaan uit 13 bladsye.

Kopiereg voorbehou

VRAAG 1: KINEMATIKA

1.1

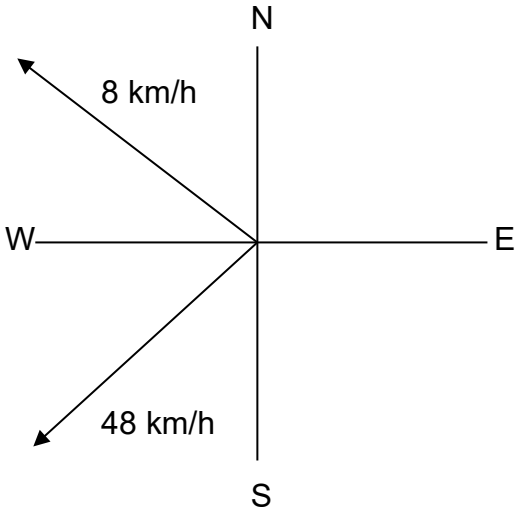

1.1.1 $\sum VC = 8\sin 154° + 48\sin 225°$
$= -30{,}434 \text{ km/h}$
$= 30{,}434 \text{ km/h}$ Suid✓

$\sum HC = 8\cos 154° + 48\cos 225°$
$= -41{,}132 \text{ km/h}$
$= 41{,}132 \text{ km/h}$ Wes✓

$R = \sqrt{30{,}434^2 + 41{,}132^2}$
$= 51{,}167 \text{ km/h}$✓

$\theta = \tan^{-1}(\frac{30{,}434}{41{,}132})$
$= 36{,}498°$✓

$\therefore R = 51{,}167 \text{ km/h}, \text{W } 36{,}498° \text{ S}$
OF
$R = 51{,}167 \text{ km/h}, \text{S } 53{,}501° \text{ W}$ ✓

ALTERNATIEWE

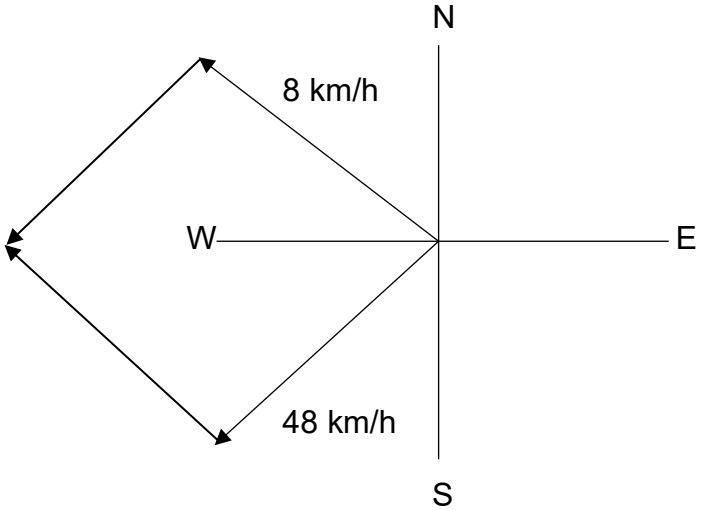

$$R = b = \sqrt{a^2 + c^2 - 2ac\cos B}$$
$$= \sqrt{48^2 + 8^2 - 2(8)(48)\cos(109)}$$
$$= 51{,}167 \text{ km/h}\checkmark$$

$$\frac{\sin A}{a} = \frac{\sin B}{b} = \frac{\sin C}{c}$$

$$\sin A = \frac{a \sin B}{b}$$
$$\sin A = \frac{8 \sin 109}{51{,}167}$$
$$= 0{,}148\checkmark$$
$$A = 8{,}501°\checkmark$$
$$\theta = werklike\ hoek = 45° + 8{,}501° = 53{,}501°\checkmark$$

$$\therefore R = 51{,}167 \text{ km/h, W } 36{,}498° \text{ S}$$
OF
$$R = 51{,}167 \text{ km/h, S } 53{,}501° \text{ W}\ \checkmark$$ (5)

1.1.2 S = Vt
= 51 167 × 5
= 255 835 km✓ (1)

1.2 $\theta = 30°$
V = 400 m/s

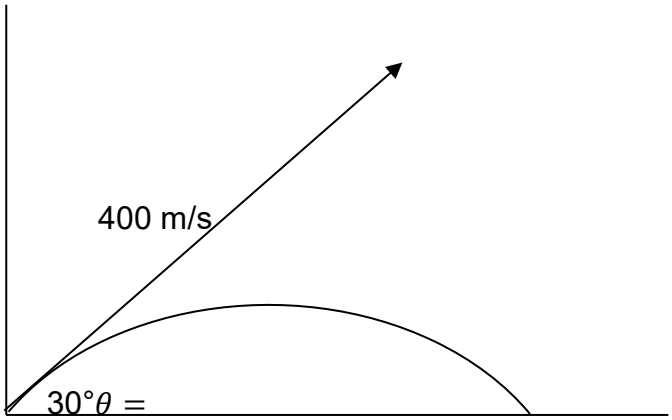

1.2.1 $$S_{vertical} = \frac{u^2 \sin^2 \theta}{2g}$$
$$= \frac{(400 \sin 30°)^2}{2\times 9{,}8}\checkmark$$
$$= 2040{,}816 \text{ m}$$
$$= 2{,}041 \text{ km}\checkmark$$

ALTERNATIEF

$$S = \frac{V^2 - U^2}{2g}$$
$$= \frac{0^2 - (400 \sin 30°)^2}{2\times 9{,}8}\checkmark$$
$$= 2040{,}816 \text{ m}$$
$$= 2{,}041 \text{ km}\checkmark$$

1.2.2 $$S_{vertikaal} = \frac{u^2 \sin 2\theta}{g}$$
$$= \frac{400^2 \sin(2\times 30°)}{9{,}8}\checkmark$$
$$= 14139{,}190 \text{ m}$$
$$= 14{,}139 \text{ km}\checkmark$$

ALTERNATIEF

$$S_{horisontaal} = V_{horisontaal} \times t, \qquad \text{Maar } t = 2 \times t_{\max h}$$
$$t_{\max h} = \frac{u \sin \theta}{g}$$
$$= \frac{400 \sin 30°}{9{,}8}$$
$$= 20{,}408 \text{ sec}\checkmark$$
$$S_{horisontaal} = 400 \cos 30° \times 2 \times (20{,}408)$$
$$= 14139{,}077 \text{ m}$$
$$= 14{,}139 \text{ km}\checkmark$$

(2 × 2) (4)

1.3 VB = 120km/h
VM = 125 km/h

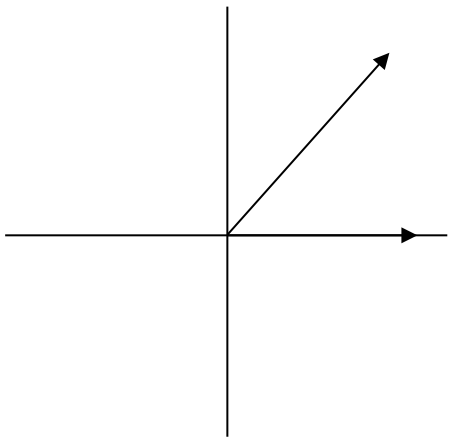

Stop M en verander sy rigting

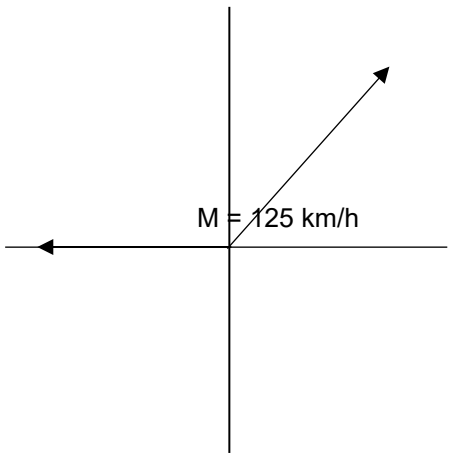

$\sum VC = 120 \sin 45° + 125 \sin 180°$
$= 84{,}853 \text{ km/h}$ Noord✓
$\sum HC = 120 \cos 45° + 125 \cos 180°$
$= -40{,}147 \text{ km/h}$
$= 40{,}147 \text{ km/h}$ Wes✓

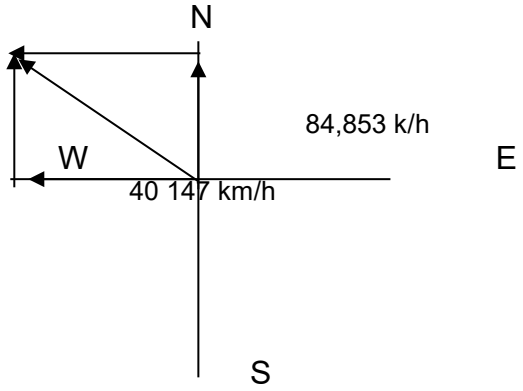

$R = \sqrt{84{,}853^2 + 40{,}147^2}$
$= 93{,}871 \text{ km/h}$✓

$\theta = \tan^{-1}(\frac{84{,}871}{40{,}147})$
$= 64{,}68°$✓

∴ Snelheid van M relatief tot die snelheid van B = 90,871 km/h, E64,68°S
OF
90,871 km/h, S 25,32° O✓

ALTERNATIEF

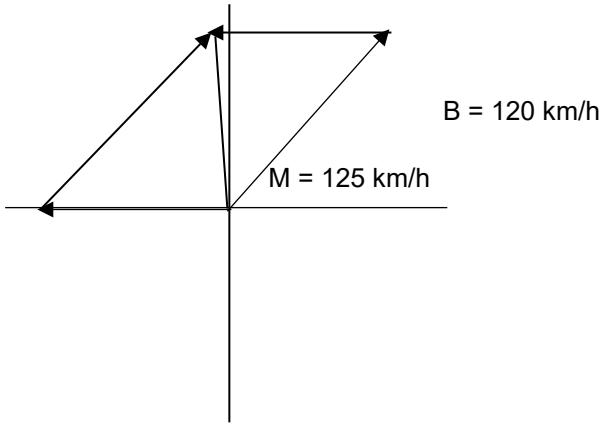

$R = \sqrt{120^2 + 125° - 2(120)(125)\cos(45)}$✓
$= 93{,}871 \text{ km/h}$✓

$\frac{\sin\theta}{120} = \frac{\sin 45°}{93{,}871}$
$\theta = \sin^{-1}(0{,}904)$✓
$= 64{,}68°$✓

∴ Snelheid van M relatief tot die snelheid van B = 90,871 km/h, E64,68°S
OF
90,871 km/h, S 25,32° O✓ (5)
[15]

VRAAG 2: HOEKBEWEGING

2.1 D
2.2 B
2.3 A
2.4 C

(4 × 2) **[8]**

VRAAG 3: DINAMIKA

3.1 u = 30 km/h = 22 222 m/s
V = 0 m/s
S = 40 m
m = 1000 kg

3.1.1 $v^2 = u^2 + 2aS$

$a = \frac{v^2-u^2}{2S}$✓

$= \frac{0^2-22{,}222^2}{2\times 40}$

$= -6{,}173\ \text{m/s}^2$✓

3.1.2 F = ma
= 1000 × 6 173✓
= - 6173 N
= 6,173 kN ✓(Teenoorgestelde rigting)

(2 × 2) (4)

3.2 V = 100 km/h = 27 778 m/s
U = 0 m/s
M = 800 kg
t = 8 s

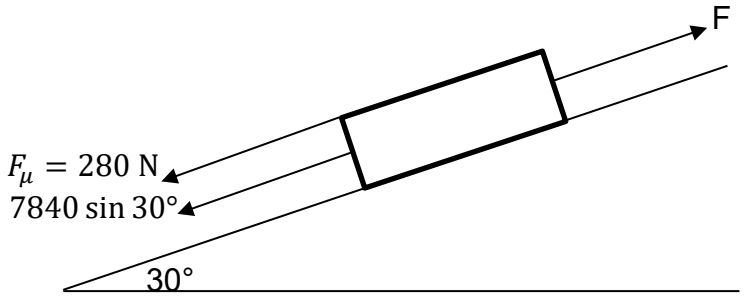

3.2.1 V = u + by
27,778 = 0 + a(8)

$a = \frac{27{,}778}{8}$

$= 3{,}472\ \text{m/s}^2$✓

$S = ut + \frac{1}{2}at^2$

$= 0(8) + 0{,}5(3{,}472)(8)^2$

$= 111{,}104$ m✓

$W = F \times s$

$= 280 \times 111{,}104$

$= 31109{,}12$ J of 31 109 kJ✓ (3)

3.2.2 $W = (mg\sin\theta) \times s$
$= [800 \times 9{,}8\sin(30°)] \times 111{,}104$✓
$= 435527{,}68\ \text{J}$✓
$= 435{,}528\ \text{kJ}$ (2)

3.2.3 Fa = ma
= 800 × 3 472
= 2777,6 N✓
= 2 778 kN

W = F × s
= 2777,6 × 111,104✓
= 308602,4704 J
= 308 603 kJ✓ (3)

3.2.4 Fup – F_{Af} = ma
F – 280 – 800×9,8×sin(30°) = 800×3,472✓
F = 2777,6 + 3920 + 280✓
= 6977,6 N
= 6 977 kN✓ (3)

3.2.5 $P = \frac{W}{t}$
$= \frac{6977{,}6\times3{,}472}{8}$✓
$= 96904{,}9088\ \text{W}$✓
$= 96{,}905\ \text{kW}$ (2)
[17]

VRAAG 4: STATIKA

4.1 4.1.1

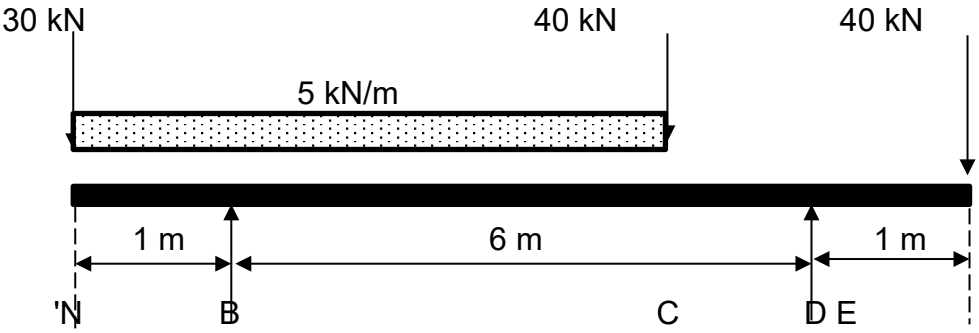

✓✓ (2)

4.1.2 Neem momente oor D

$\sum$ kloksgewyse momente $=$ $\sum$ antikloksgewyse momente

$(40 \times 1) + (B \times 6) = (40 \times 1) + (30 \times 7) + (30 \times 4)$✓

$B = 55$ kN✓

Neem momente oor B

$\sum$ kloksgewyse momente $=$ $\sum$ antikloksgewyse momente

$(40 \times 7) + (40 \times 5) + (30 \times 2) = (30 \times 1) + (D \times 6)$ ✓

$D = 85$ kN✓

OF

$\sum$ Opwaartse kragte $=$ $\sum$ Afwaartse kragte

B + D = 40 + 40 + 30 + 30 ✓

49 167 + D = 125

D = 85 kN✓ (4)

4.1.3 BM by A (van links)
= (-30×1) + (-5×1×0,5)
= -32,5 kNm✓

OF

BM by B (van regs)
= (-5×5×2,5) + (-40×5) + (85×6) + (-407)
= -32,5 kNm✓

BM by C (van links)
= (-30×6) + (55×5) + (-5×6×3)
= 5 kNm✓

OF

BM by C (van regs)
= (-40×2) + (85×1)
= 5 kNm✓

BM by D (van links)
= (-40×1) + (-5×6×4) + (-30×7) + (55×6)
= -40 kNm✓

OF

BM by D (van regs)
= (-40×1)
= -40 kNm✓ (3)

4.1.4

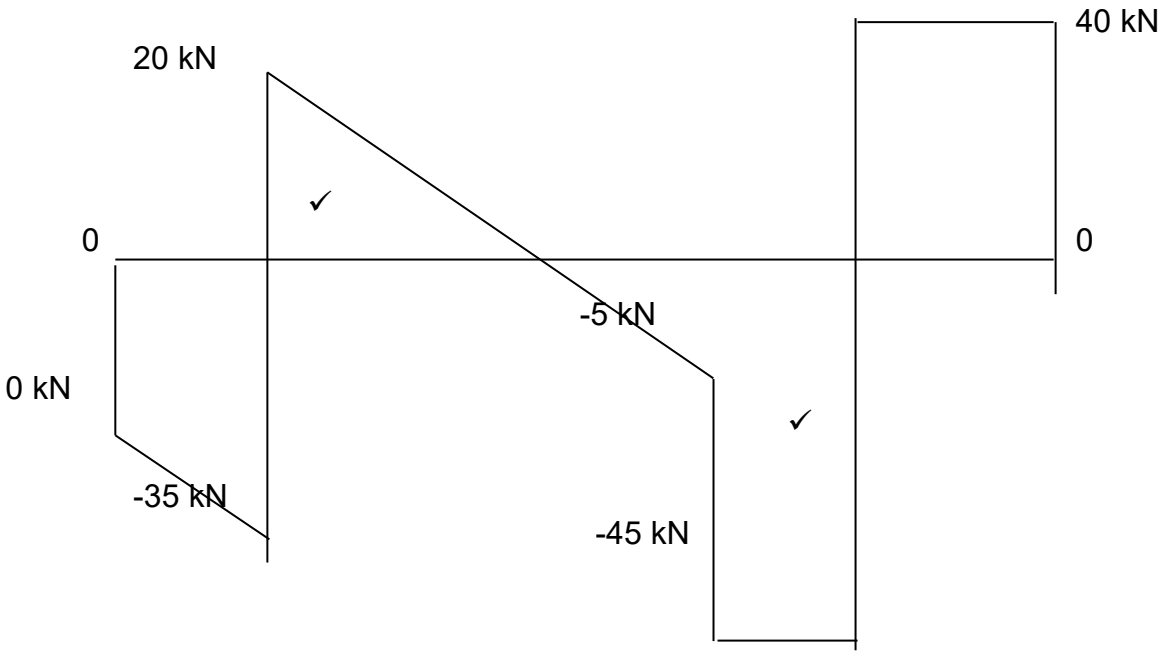

(2)

4.1.5

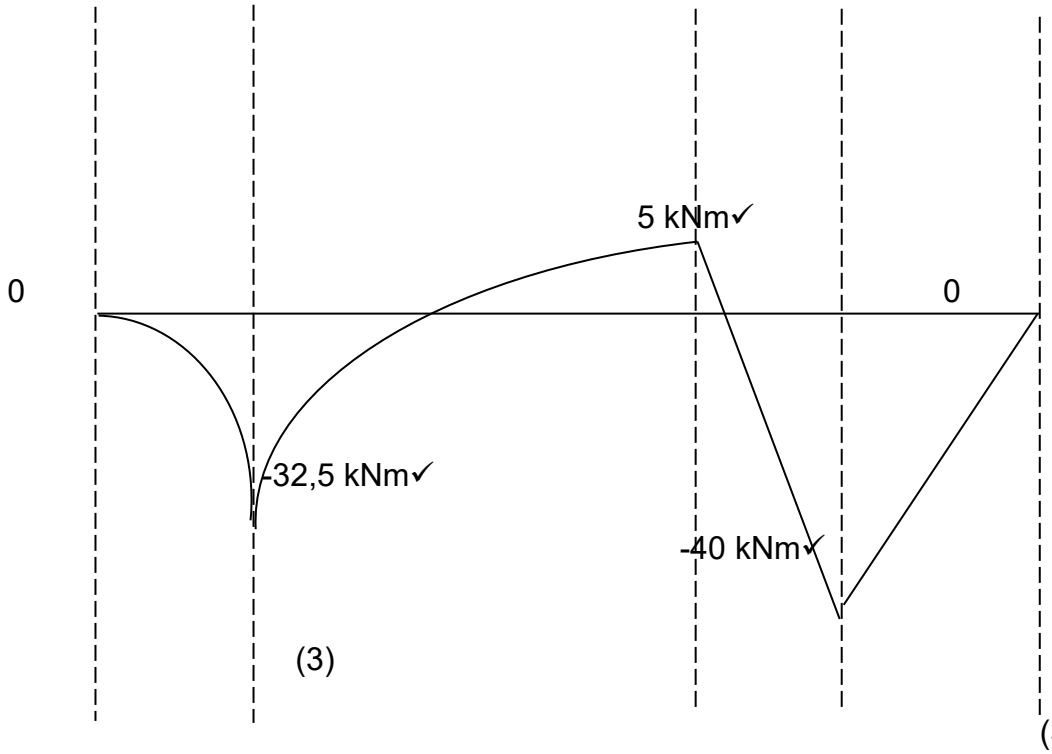

(3)

(3)

4.1.6 Maksimum buigmoment = 40 kNm (sak)

Of

Maksimum buigmoment = -40 kNm
Posisie = 1 m van die regterkant af of by punt D

Of

Posisie = 7 m vanaf die linkerkant of by punt D✓✓ (2)
[16]

VRAAG 5: HIDROULIKA

5.1 w = mg = 4,6×10³ × 9,8
= 45080 N
D = 450 mm = 0,45 m
D = 100 mm = 0,1 m
SL = 120 mm = 0,12 m
MA = 20

5.1.1 $\frac{W}{F} = \frac{D^2}{d^2}$

$F = \frac{d^2 \times W}{d^2}$

$F = \frac{0{,}1^2 \times 45080}{0{,}45^2}$✓

$= 2226{,}173$ N✓

$MA = \frac{L}{E}$

$E = \frac{L}{MA}$

$E = \frac{2226{,}173}{20}$

$= 111{,}309$ N✓

Vir 90% doeltreffendheid $E = 111{,}309 \times \frac{100}{90}$✓

$= 123{,}677$ N✓ (5)

5.1.2 $V_R = V_P$

$A_R \times H = A_P \times SL \times n$✓

$\frac{\pi \times 0{,}45^2}{4} \times H$✓ $= \frac{\pi \times 0{,}1^2}{4} \times 0{,}12 \times 160$✓

$H = 0{,}948$ m✓ (4)

5.2 N = 250 r/min
d = 85 mm = 0,085 m
SL = 590 mm = 0,59 m
C = 3
Glip = 1,7%
Doeltreffendheid = 100 – Glip% = 100 – 1,7 = 98,3%
V_a = werklike volume in l/s

$$V_P = A \times SL \times C \times \frac{N}{60}$$
$$= \frac{\pi \times 0{,}085^2}{4} \times 0{,}590 \times 3 \times \frac{250}{60}$$
$$= 0{,}041849\ \text{m}^3 ✓$$
$$V_a = V_P \times \frac{\eta}{100}$$
$$= 0{,}041849 \times \frac{98{,}3}{100} ✓$$
$$= 0{,}041137567\ \text{m}^3/\text{s} \times (1000\ \text{l/s})$$
$$= 41{,}138\ \text{l/s} ✓$$ (3)

5.3 m
Va = 320 l/min
h = 80%

$$P = \rho \times g \times h$$
$$= 1000 \times 9{,}8 \times 70$$
$$= 686000\ \text{Pa}$$
$$= 686\ \text{kPa} ✓$$

$$V_a = 320000 \times \frac{1}{60}$$
$$= 5333{,}333\ \text{m}^3/\text{s}$$

$$P_{uit} = (686000)(5333{,}333)$$
$$= 3658666438\ \text{W} ✓$$

$$\eta = \frac{P_{uit}}{P_{in}} \times 100$$

$$P_{in} = \frac{P_{uit}}{\eta} \times 100$$
$$= \frac{3658666{,}438}{80} \times 100$$
$$= 4573333{,}048\ \text{kW} ✓$$ (3)

[15]

VRAAG 6: STRES EN SPANNING

6.1 Limiet van proporsionaliteit is die punt waarop die spanning nie meer eweredig is aan spanning nie. (2)

6.2 D = 1,8d
L0 = 700 mm = 0,7 m
F = 315 kN = 315 000 N
X = 0,319
E = 200 GPa

$$E = \frac{F \times L_0}{A \times X}$$

$$A = \frac{F \times L_0}{E \times X} \checkmark$$

$$= \frac{315000 \times 0,7}{200 \times 10^9 \times 0,139 \times 10^{-3}} \checkmark$$
$$= 0,00793 \text{ m}^2$$
$$= 7,932 \times 10^{-3} \text{ m}^2 \checkmark$$

$$\text{Oppervlakte van pyp} = \frac{\pi(D^2 - d^2)}{4}$$
$$= \frac{\pi[(1,8d)^2 - (d)^2]}{4} \checkmark$$
$$\frac{4(7,932 \times 10^{-3})}{\pi} = 2,24d^2$$
$$d = 0,0671 \text{ m} \checkmark$$
$$D = 1,8d$$
$$D = 1,8 \times 0,0671 \checkmark$$
$$= 0,121 \text{ m} \checkmark$$ (7)

6.3 F = 9,5 kN = 9 500 N
S = 195 mm = 0,195 m
X = 0,213 mm

6.3.1
$$Stres = \frac{F}{A}$$
$$= \frac{9\,500}{0,195^2} \checkmark$$
$$= 249835,6345 \text{ Pa}$$
$$= 249,836 \text{ kPa} \checkmark$$ (2)

6.3.2
$$Spanning = \frac{X}{L}$$
$$= \frac{0,213}{4\,500} \checkmark$$
$$= 4,733 \times 10^{-5} \checkmark$$ (2)

6.3.3
$$E = \frac{249835,6345}{4,733 \times 10^{-5}}$$
$$= 5,279 \text{ GPa} \checkmark$$ (1)

[14]

VRAAG 7: HITTE

7.1
- Isochories
- Isobaries
- Isotermies (3)

7.2 Isotermies (1)

7.3 L × B × H = 75 cm × 35 cm × 20 cm = 750 mm × 350 mm × 200 mm
T1 = 38 °C
T2 = 400 °C
$\alpha = 17 \times 10^{-6}/°C$

7.3.1
$$\Delta L = L_0 \times \alpha \times (t_2 - t_1)$$
$$= 75 \times 17 \times 10^{-6}(400 - 38)\checkmark$$
$$= 0{,}462 \text{ cm}\checkmark$$ (2)

7.3.2
$$A_f = A_0 + A_0 \times 2\alpha \times (t_2 - t_1)$$
$$= (750 \times 350) + (750 \times 350) \times 2 \times 17 \times 10^{-6}(400 - 38)\ \checkmark\checkmark$$
$$= 265730{,}85 \text{ mm}^2\checkmark$$ (3)

7.3.2
$$\Delta V = V_0 \times 3\alpha \times (t_2 - t_1)$$
$$= 0{,}75 \times 0{,}35 \times 0{,}2 \times 3 \times 17 \times 10^{-6}(400 - 38)\checkmark\checkmark$$
$$= 0{,}969 \times 10^{-3} \text{ m}^3\ \checkmark$$ (3)

7.4 P1 = 750 kPa
P2 = 1300 kPa
V1 = 0,495 m³
V2 = 0,0749 m³

$$\frac{P_1V_1}{T_1} = \frac{P_2V_2}{T_2}$$
$$= \frac{P_2V_2T_1}{P_1V_1}\checkmark$$
$$= \frac{1000 \times 0{,}0639 \times 348}{750 \times 0{,}495}\checkmark$$
$$= 59{,}89 \text{ °K}\checkmark$$ (3)

[15]

TOTAAL: 100

Kopiereg voorbehou