higher education & training

Department:
Higher Education and Training
REPUBLIC OF SOUTH AFRICA

MARKING GUIDELINE

NATIONAL CERTIFICATE

ELECTRICAL TRADE THEORY N3

26 November 2024

This marking guideline consists of 8 pages.

Copyright reserved

QUESTION 1: ALTERNATING CURRENT CIRCUIT THEORY

1.1 1.1.1 phase (1)

1.1.2 lagging✓ and 90°✓ (2)

1.1.3 leading✓and 90°✓ (2)

1.2 1.2.1 380 V (1)

1.2.2 $X_L = 2\pi fL$
$= 2\pi \times 50 \times 0{,}043$ ✓
$= 13{,}509\ \Omega$ ✓

$Z = \sqrt{R^2 + (X_L)^2}$
$= \sqrt{6{,}75^2 + (13{,}509)^2}$ ✓
$= 15{,}102\ \Omega$ ✓

$\therefore I_T = \frac{V}{Z}$

$= \frac{380}{15{,}102}$ ✓

$= 25{,}162\ A$ ✓ (6)

1.2.3 $\cos\theta = \frac{R}{Z}$

$= \frac{6{,}75}{15{,}102}$ ✓

$= 0{,}447\ lagging$ ✓ (2)

1.2.4 $P = \sqrt{3}\, V_L I_L \cos\theta$

$= \sqrt{3} \times 380 \times 25{,}162 \times 0{,}447$ ✓

$= 7{,}403\ kW$ ✓

or $P = 3\, V_{PH} I_{PH} \cos\theta$

$= 3 \times 380 \times (14{,}527) \times 0{,}447$

$= 7{,}403\ kW$ (2)

1.3 Algebraic sum is used when adding scalar quantities✓ while Vector sum is used when adding quantities having magnitude and direction.✓ (2)

[18]

QUESTION 2: DOMESTIC APPLIANCES

2.1
- Semi-automatic top loading
- Fully automatic top loading
- Front loading (washer and dryer symbol)
- Front loading (stackable with separate washer and dryer)
- Front loading integrated
- Compact or portable

(Any 4 × 1) (4)

2.2
- They are expensive
- Special types of pots and pans needed
- They make a buzzing sound
- Its operation depends on electricity, no cooking during power outages

(Any 3 × 1) (3)

2.3
- Once the control knob is turned to any heat setting, current flows through the heating element which heats the bimetal strip. ✓
- The two metals expand when heated but not at the same rate, which cause the strip to bend and open the contacts. ✓
- As soon as contacts open, no current flows through the heating element, thus allowing the heating element and bimetal strip to cool. ✓
- As the bimetal strip cools, it also straightens out, causing the contacts to close again for the process to be repeated. ✓
- the time taken for the contacts to open is determined by the pressure exerted on the contacts by each other. ✓ (5)

[12]

QUESTION 3: LIGHTING SYSTEMS

3.1
- Ambient lighting
- Task lighting
- Accent lighting

(3 × 1) (3)

3.2
3.2.1 False
3.2.2 True
3.2.3 False
3.2.4 True
3.2.5 False

(5 × 1) (5)

[8]

QUESTION 4: PROGRAMMABLE LOGIC CONTROLLERS

4.1 Is a digital computer that is designed and built to automate manufacturing processes,✓ traffic lights, motor starters and process controls. ✓ (2)

4.2
- Input and output (I/O) modules
- Communication ports for input devices
- Power unit
- Central Processing Unit (CPU)

(Any 3 × 1) (3)
[5]

QUESTION 5: DIRECT CURRENT MACHINES

5.1 It is to combine the rising characteristic of a series-wound generator and the drooping characteristic of a shunt-wound generator✓ to produce a machine with a nearly constant output.✓ (2)

OR

To minimise the difference in terminal voltage between no load and full load.

5.2 5.2.1

$$I_{sh} = \frac{V}{R_{sh}}$$

$$= \frac{440}{100} \checkmark$$

$$= 4{,}4\ A \checkmark$$ (2)

5.2.2

$$Shunt\ field\ Cu\ loss = VI_{sh} = 440 \times 4{,}4 \checkmark = 1\,936\ W \checkmark$$

OR

$$= (I_{sh})^2 R_{sh} = (4{,}4)^2 \times 100 = 1\,936\ W$$ (2)

5.2.3

$$I_{L2} = \frac{P_0}{V}$$

$$= \frac{40\,000}{440}$$

$$= 90{,}909\ A \checkmark$$

$$\therefore I_{a2} = I_{L2} + I_{sh}$$

$$= 90{,}909 + 4{,}4$$

$$= 95{,}309\ A \checkmark$$ (2)

5.2.4 $Armature\ Cu\ losses = (I_{a2})^2 R_a$

$= [(95{,}309)^2 \times 0{,}12]$

$= 1\,090{,}057\ W$ ✓

$Constant\ losses = VI_{a(1)}$

$= (440) \times 15$

$= 6\,600\ W$ ✓

$Total\ losses = (I_{a2})^2 R_a + VI_{sh} + VI_{a(1)}$

$= 1\,090{,}057 + 1\,936 + 6\,600$ ✓

$= 9\,626{,}057\ W$ ✓ (4)

5.2.5 $\%\ Efficiency = \frac{P_0}{P_{IN}} \times 100\%$

$\%\ Efficiency = \frac{P_0}{P_0 + Total\ losses} \times 100\%$ ✓

$= \frac{40\,000}{40\,000 + 9\,626{,}057} \times 100\%$ ✓

$= 80{,}603\%$ ✓ (3)

[15]

QUESTION 6: ALTERNATING CURRENT MACHINES

6.1
- Once the start button is pressed, the main contactor (K1), star contactor (K2) and the timer (T1) are all energised. ✓ The motor starts running in star. ✓
- The delta contactor (K3) will not energise because of the normally open contact of the timer. ✓
- As soon as the time delay has lapsed, the timer coil de-energises and the normally open contact of the timer changes to a closed contact. ✓ The delta contactor (K3) now energises and the normally closed contact of the timer changes to an open contact and the star contactor (K2) de-energises. ✓
- The motor now runs in delta until it is switched off. ✓ (6)

6.2 $\% Slip = \frac{Ns - Nr}{Ns}$

$= \frac{1500 - 1450}{1500}$ ✓

$= 3{,}33\%$ ✓ (2)

6.3 $Ns = \frac{60\ X\ f}{p}$

$= \frac{60\ X\ 50}{2}$ ✓

$= 1500\ r/min$ ✓ (2)
[10]

QUESTION 7: TRANSFORMERS

7.1 7.1.1 B
7.1.2 C
7.1.3 D
7.1.4 A
(4 × 1) (4)

7.2
- Natural air cooling
- Forced air cooling
- Oil-immersed air cooling
- Oil-immersed water cooling

(4 × 1) (4)

7.3 To absorb the moisture from the air entering the transformer. (1)

7.4 To accommodate the expansion in the oil. (1)
[10]

QUESTION 8: EARTHING SYSTEMS

8.1

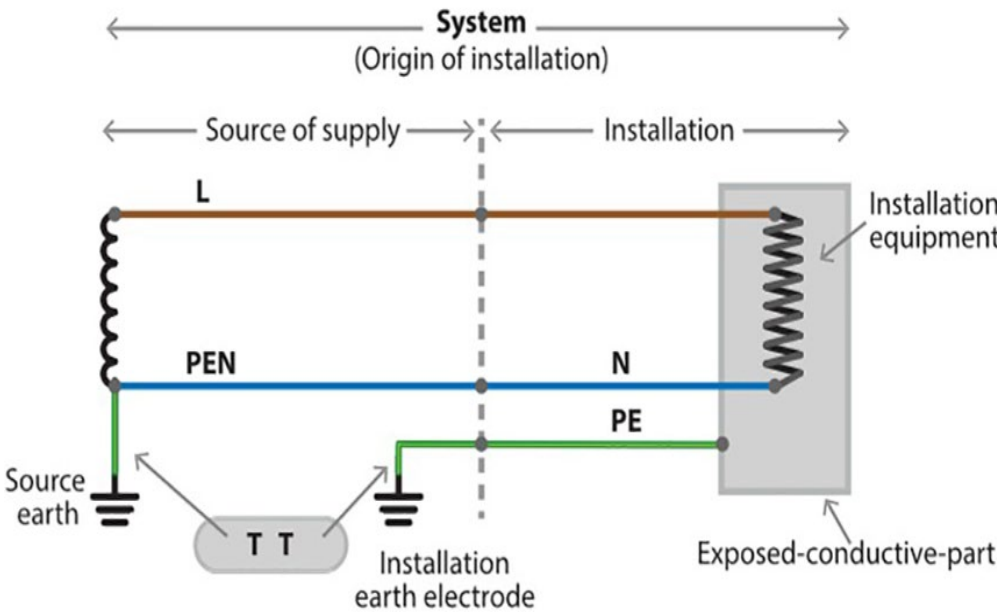

Correctness of drawing	1 mark
Any labelling	1 mark each

(7)

8.2 8.2.1 Earthing
8.2.2 Winding
8.2.3 Transformer

(3 × 1) (3)

[10]

QUESTION 9: POWER MANAGEMENT

9.1 A phase advancer is an AC exciter, mounted on the shaft of an induction motor✓ And connected to the motor's rotor circuit for power factor correction purposes.✓ (2)

9.2 9.2.1 D
9.2.2 A
9.2.3 D

(3 × 1) (3)

9.3 Miniature circuit breakers installed in meter boxes to automatically disconnect domestic consumers from supply✓ if their demand at any moment (amperage) exceeds the capacity of the circuit breaker.✓ (2)

[7]

QUESTION 10: RENEWABLE ENERGY

10.1 Is to provide an uninterrupted stable AC supply when there is a break in the AC supply from the grid✓ or in case of voltage spikes of voltage drops that might damage sensitive electrical equipment.✓ (2)

10.2
- Very costly to install.
- It is weather dependent
- The sun does not shine 24 hours a day
- Requires space.
- Some toxic materials and chemicals are used in the manufacture of photovoltaic cells.
- Some solar thermal systems use potentially hazardous fluids for heat transfer.

(Any 3 × 1) (3)
[5]

TOTAL: 100

Copyright reserved