higher education & training

Department:
Higher Education and Training
REPUBLIC OF SOUTH AFRICA

MARKING GUIDELINE

NATIONAL CERTIFICATE

DIGITAL ELECTRONICS N6

22 November 2024

This marking guideline consists of 6 pages.

Copyright reserved

QUESTION 1

1.1 Thermocouple (1)

1.2 Feedback loop (1)

1.3

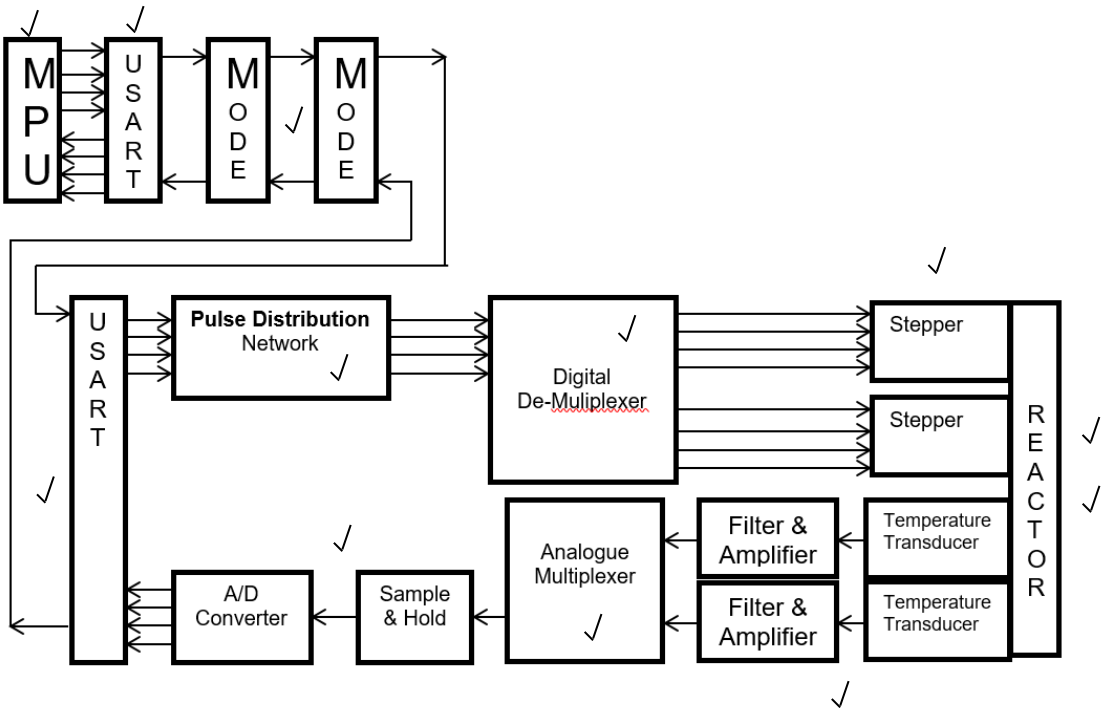

or

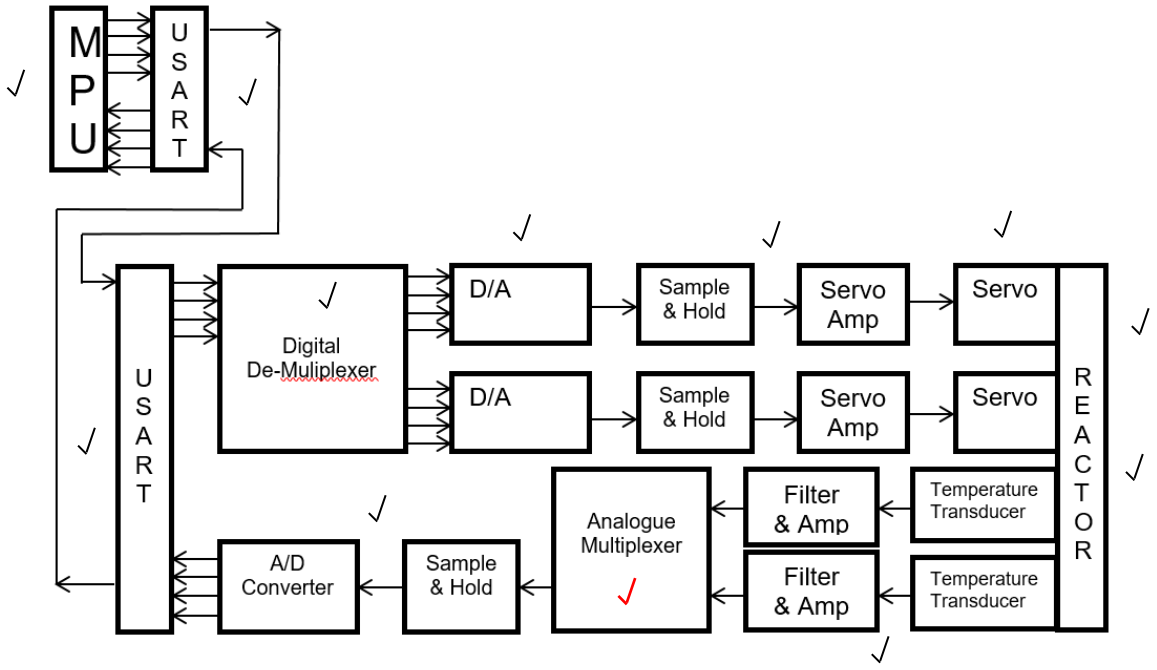

The same question could be answered by using SERVO motors in the place of STEPPER motors. If no telephone lines are used, then the MODEMS can also be eliminated. The reactor must be clearly marked.
The markers must use their discretion when awarding marks, making sure of the directions of the actions. (12)

1.4

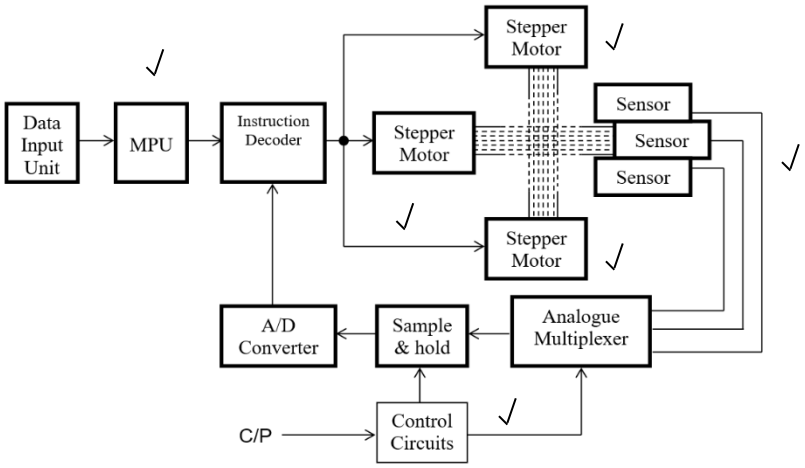

(6)
[20]

QUESTION 2

2.1 Typically, a data acquisition system has several analogue inputs,✓ which can be either randomly or sequentially addressed by the computer.✓ Once the computer has processed the data✓ it will automatically carry out the tasks assigned to it.✓ (4)

2.2

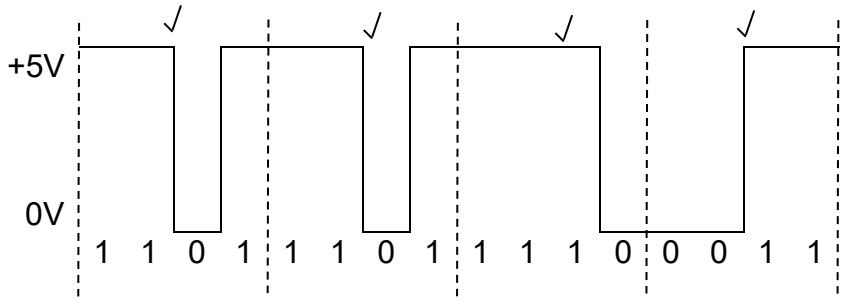

(4)

2.3
- Data selection
- Data routing
- Operation sequencing
- Parallel-to-serial conversion
- Waveform generation
- Logic function generation (5)

2.4 2.4.1 Central Processing Unit
2.4.2 Universal Serial Bus
2.4.3 Arithmetic and Logic Unit
(3 × 1) (3)

2.5 2.5.1 PPI – the I/O port is merely a buffer,✓ which can be used to send data to the MPU data bus or receive data from the data bus.✓

2.5.2 PIA - the I/O port is merely a buffer,✓ which can be used to send data to the MPU data bus or receive data from the data bus.✓
(2 × 2) (4)
[20]

QUESTION 3

3.1

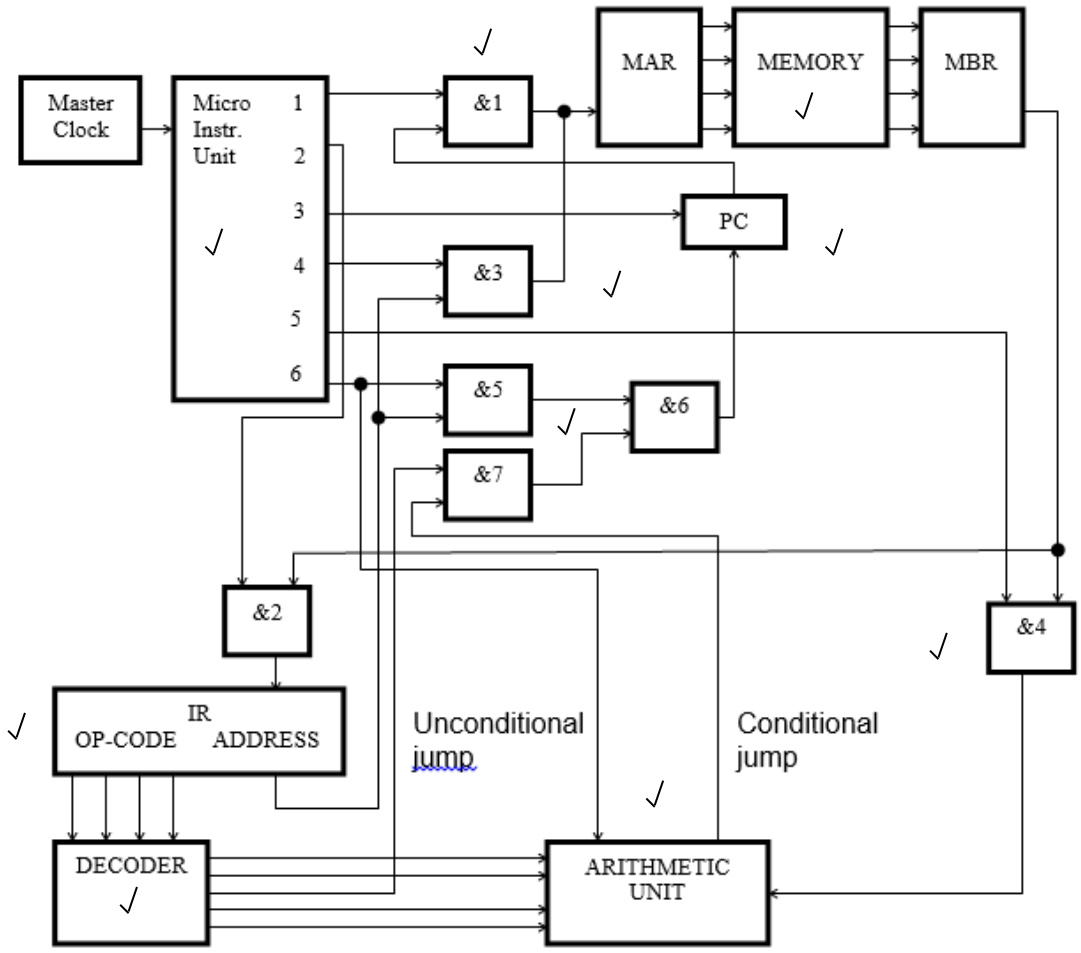

Marker to use discretion (10)

3.2 Fetch✓ and Execute✓ (2)

3.3

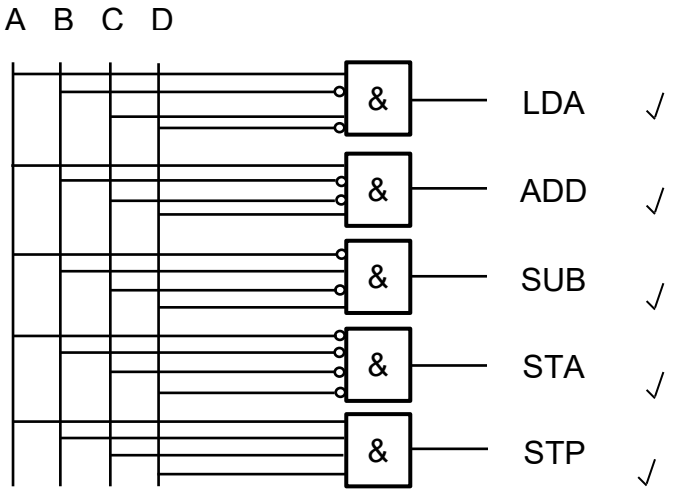

(5)

3.4 The task is completed after 5 pulses✓ but the system always produces 6 pulses✓ so the last pulse has no event occurring in it.✓ (3)

[20]

QUESTION 4

4.1

AMOS	BJORK	HARVEY
15	8	23 ✓
	15 ✓	
		30 ✓
	22 ✓	
		37 ✓
	29 ✓	
		44 ✓
	36 ✓	
		51
	43	

51 43 15 ✓✓ (10)

4.2 Formula Translation (1)

4.3

Instruction #	Address contents
0000	55_{16} ✓
0001	BB_{16} ✓
0002	66_{16} ✓
0003	AA_{16} ✓
0004	99_{16} ✓

(5)

4.4 4.4.1 Real-time programs processes the data as it is entered,✓ whereas with batch processing all data is entered and stored and then processed together at a later date.✓

4.4.2 Real-time examples: airline, theatre ticket, bus or train reservations, ATM transactions✓ (or any other suitable answer)

Batch processing examples: salaries & wages, billing for accounts✓ (or any other suitable answer)

(2 × 2) (4)

[20]

QUESTION 5

5.1 Positions 1 2 3 4 5 6 7 8 9 10
Data 0 0 0 0 0 1 1 0 1 0

Pos. 1 checks 1; 3; 5; 7; 9
0 0 0 1 1 - 1s are even thus 0✓
Pos. 2 checks 2; 3; 6; 7; 10
0 0 1 1 0 - 1s are even thus 0✓
Pos. 4 checks 4; 5; 6; 7
0 0 1 1 - 1s are even thus 0✓
Pos. 8 checks 8; 9; 10
0 1 0 - 1s are odd thus 1✓

Thus, the fault lies on bit $1000_2 = 8_{10}$ ✓
Thus pos. 8, which is a 0 should be a 1
i.e., the word should be: $0000011\underline{1}10_{hamming}$✓✓

(The number must be corrected and the code must be identified with the correct subscript for both marks to be awarded.) (7)

5.2 5.2.1 $+ 0{,}1111000 \times 10^{+100}$✓
$= 1111_2$✓
$= 8 + 4 + 2 + 1$
$= 15_{10}$✓ (3)

5.2.2 $= - 0{,}0101 \times 10^{+010}$✓
$= - 1{,}01_2$✓
$= - 1{,}25_{10}$✓ (3)

5.3 F = C✓✓

Note: The answer could be obtained by inspection so showing the steps are not necessary to obtain full marks. (2)

5.4 1010001_{gray} ✓✓

Note: To obtain both marks, the subscript must be included. If only the number is correct, only one mark is to be awarded. If the number is incorrect and the subscript is correct, no marks. (2)

5.5 549_{10} ✓ = $1011\ 0100\ 1111_{2421}$ ✓ (2)

5.6 The ability to switch a transistor from the off state (0) into saturation (1)
OR because it only has TWO states, 0 and 1 or low (0) and high (1) ✓✓ (2)
[20]

TOTAL: 100

Copyright reserved