higher education & training

Department:
Higher Education and Training
REPUBLIC OF SOUTH AFRICA

MARKING GUIDELINE

NATIONAL CERTIFICATE

COMMUNICATION-ELECTRONICS N4

19 November 2024

This marking guideline consists of 7 pages.

Copyright reserved

QUESTION 1

1.1 False
1.2 True
1.3 True
1.4 True
1.5 False
1.6 False
1.7 False
1.8 True
1.9 True
1.10 False

(10 × 1) **[10]**

QUESTION 2

2.1 The sum of the EMFs in any closed circuit is equal to the sum of the potential differences in that circuit. (2)

2.2

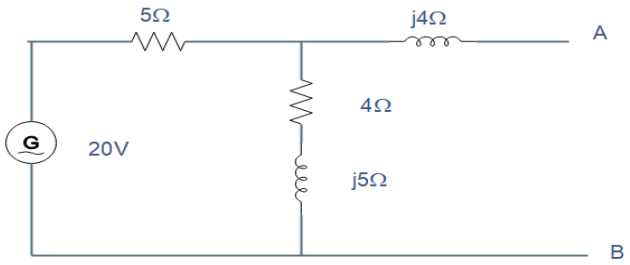

With AB open circuit:

$I = \frac{20\angle 0°}{5+4+j5} = \frac{20\angle 0°}{9+j5}$ ✓ $= \frac{20\angle 0°}{10{,}3\angle 29{,}1°}$ = 1,94∠-29,1° A ✓

P_d = drop across 4 + j5
= I × (4 + j5)
= 1,94∠-29,1° × 6,4∠51,34°✓
= 12∠22,24° V✓

Without EMF:

$Z = j4 + \frac{5(4+j5)}{5+4+j5} = j4 + \frac{20+j25}{9+j5}$✓ = j4 + 2,87 + j1,16 ✓
= **2,87 + j5,16**√

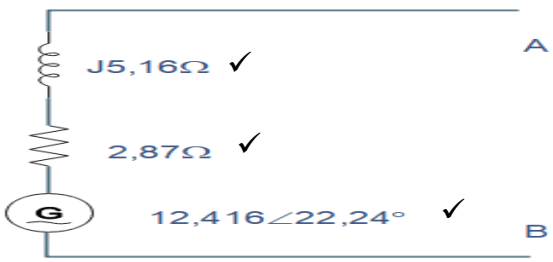

(THREE marks for the circuit) (9)
[11]

QUESTION 3

3.1

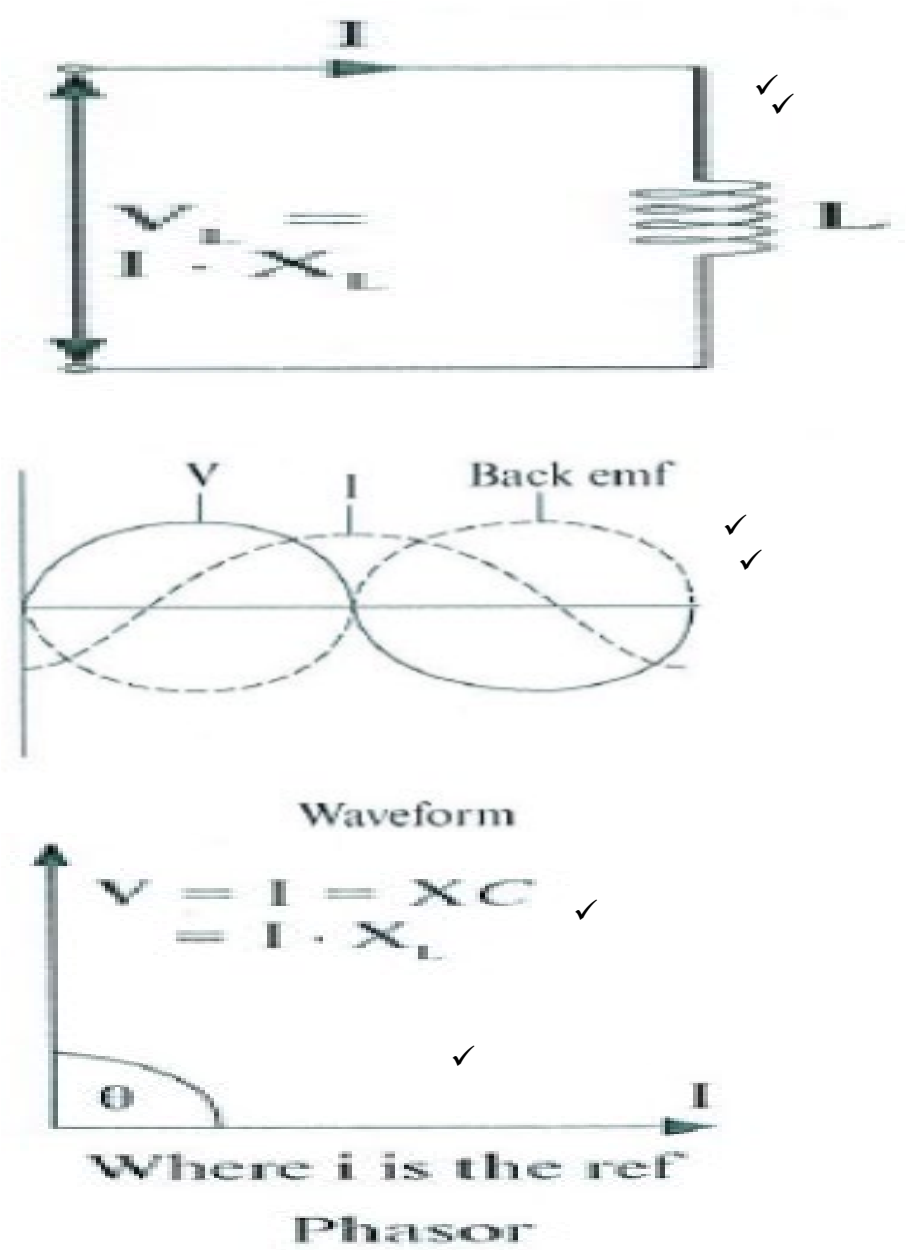

(6)

3.2 3.2.1 The current in each branch

$X_L = 2\pi FL = 2 \times \pi \times 50 \times 50 = 15707{,}96\ \Omega$ ✓

$$X_C = \frac{1}{2\pi \times F \times C} = \frac{1}{2\pi \times 50 \times 100 \times 10^{-6}} = 31{,}83\ \Omega$$ ✓

$I_R = \frac{V}{R} = \frac{220}{50} = 4{,}4\ A$ ✓

$I_L = \frac{V}{XL} = \frac{220}{15707{,}96} = 0{,}014\ A$ ✓

$I_C = \frac{V}{Xc} = \frac{220}{31{,}83} = 6{,}91\ A$ ✓

(5)

3.2.2 The total current flowing in the circuit:

IX = Ic – IL = 6,91 – 0,014 =6,896 A ✓

It = $\sqrt{IR^2 + IX^2}$ = $\sqrt{4{,}4^2 + 6{,}896^2}$ = 8,18 A ✓ (2)

3.2.3 $\emptyset = \text{Tan}^{-1}\frac{\text{Ix}}{\text{IR}} = \text{Tan}^{-1}\left(\frac{6{,}896}{4{,}4}\right) = 57{,}46^0$ ✓ (1)

[14]

QUESTION 4

4.1 4.1.1 A network that has low attenuation in a certain band of frequencies✓ and high attenuation at all other frequencies.✓

4.1.2 A resistance network that is used to reduce voltage, current or power in controllable✓ and known amounts that are independent of frequency.✓

(2 × 2) (4)

4.2

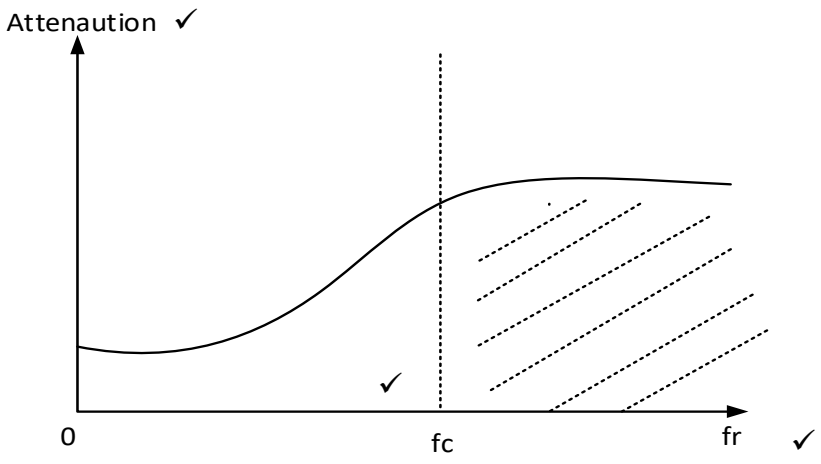

(3)

4.3

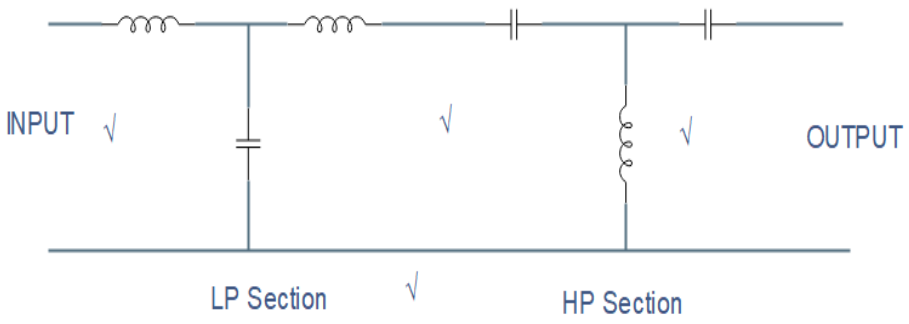

(4)

[11]

QUESTION 5

5.1 Modulation is the modification of a signal to carry intelligent data over the communication channels.✓✓ It reduces the quantity of noise present in the communication band.✓✓ (4)

5.2 5.2.1 A modulation technique that allows variation in the position of the pulses✓ according to the amplitude of the sampled modulating signal.✓

5.2.2 Depth of modulation is the extent of the variation✓ in the amplitude of the modulated wave.✓

(2 × 2) (4)

5.3
- It uses a narrower bandwidth than FM.
- If a signal is strong enough not even a power source is needed.
- Its unsophisticated signal can be detected (turned into sound) with simple equipment. (3)

[11]

QUESTION 6

6.1
- Amplifier modulation
- Oscillator modulation (2)

6.2

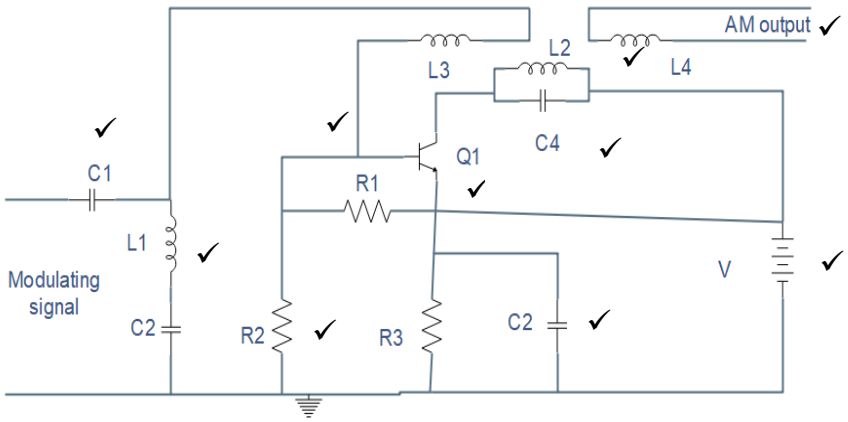

(10)

[12]

QUESTION 7

7.1

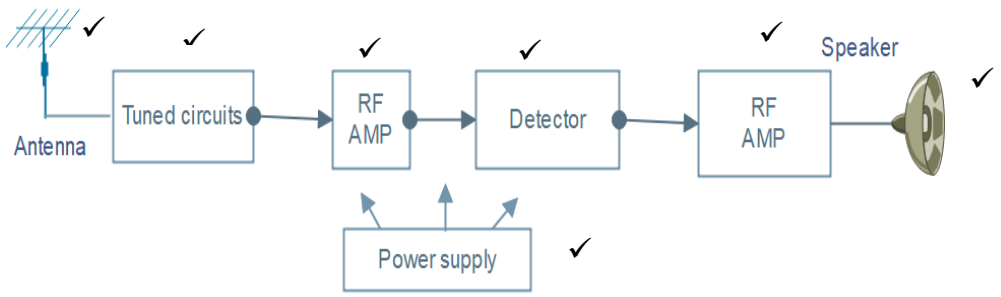

(ONE mark for each labelled block and TWO marks for correctness) (9)

7.2 The antenna collects the radio signal.

The RF amplifier uses frequency-determining networks to convert the input signal into an output signal that will provide the required response at a given frequency.

The detector converts an amount of radiation into some other measurable phenomenon.

RF amplifier converts a low-power radio-frequency signal into a higher-power signal.

The speaker converts electromagnetic waves into sound waves.

The power supply converts electric current from a source to the correct voltage, current, and frequency to power the load. (6)

7.3
- It is neither sensitive nor selective.
- It is unstable.
- The system is very seldom used in today's life. (3)

[18]

QUESTION 8

8.1 Radio wave propagation is the behaviour of radio waves as they travel, or are propagated✓ from one point to another in a vacuum or into various parts of the atmosphere.✓ (2)

8.2

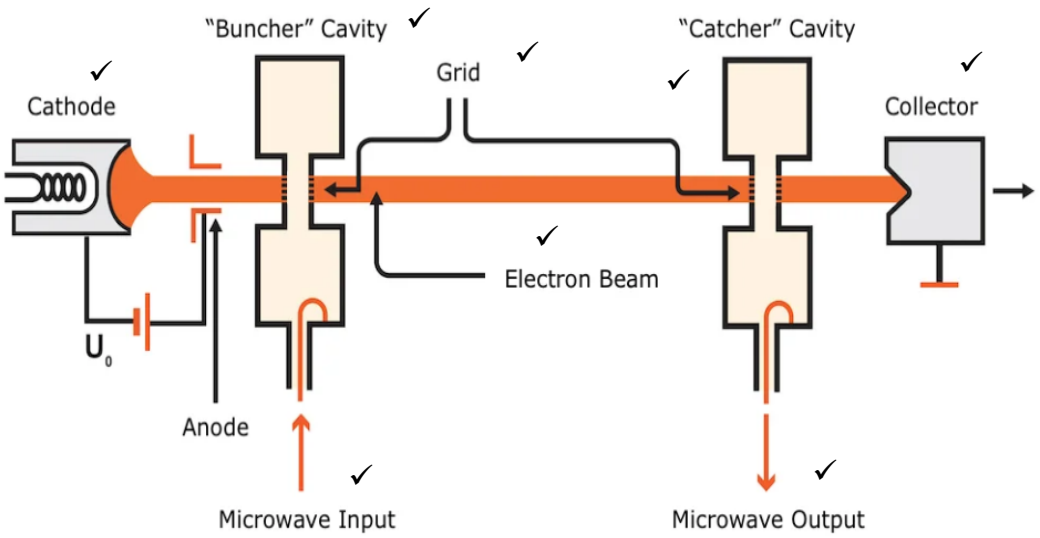

(8)

8.3

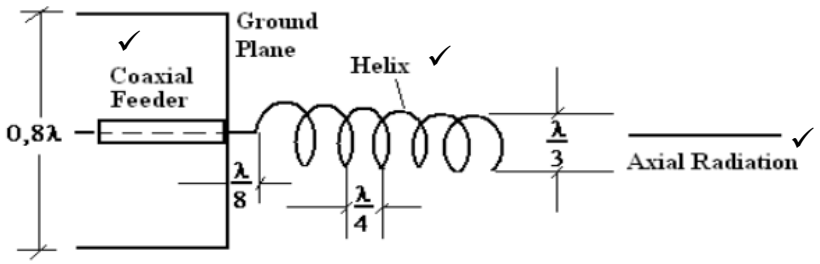

(3)
[13]

TOTAL: 100

Copyright reserved