higher education & training

Department:
Higher Education and Training
REPUBLIC OF SOUTH AFRICA

MARKING GUIDELINE

NATIONAL CERTIFICATE

BUILDING SCIENCE N3

21 November 2024

This marking guideline consists of 7 pages.

Copyright reserved

QUESTION 1

1.1 Cement (2)

1.2 The strength of concrete is inversely proportional to the water-cement ratio.✓
The higher the ratio, the lower the strength and vice versa.✓ (2)

1.3
- Increasing the water-water ratio
- Increasing the size of aggregates
- Using well-rounded and smooth aggregates
- Using nonporous and saturated aggregates
- Increasing the mixing time
- Increasing the mixing temperature
- Adding plasticisers and air-entraining mixtures (Any 6 × 1) (6)

[10]

QUESTION 2

2.1 2.1.1 Take moments about RL:

Anticlockwise moments = Clockwise moments

$(2 \times 0,5) + (3 \times 0,9) + (2 \times 0,4 \times 1,4) = (R_E \times 1,2) + (0,5 \times 0,5 \times 0,25)$✓

$R_E = 3,97$ kN✓

2.1.2 Take moments about RR:

Clockwise moments = Anticlockwise moments

$(2 \times 0,4 \times 0,2) + (R_B \times 1,2) = (3 \times 0,3) + (2 \times 0,7) + (0,5 \times 0,5 \times 1,45)$✓

$R_B = 2,08$ kN✓

(2 × 2) (4)

2.2

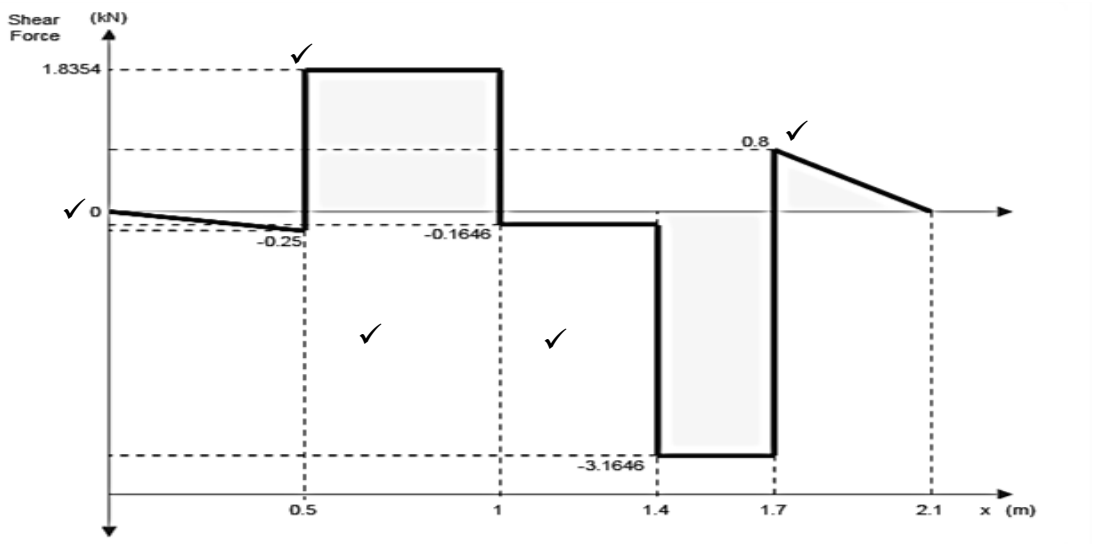

SHEAR-FORCE DIAGRAM (5)

2.3

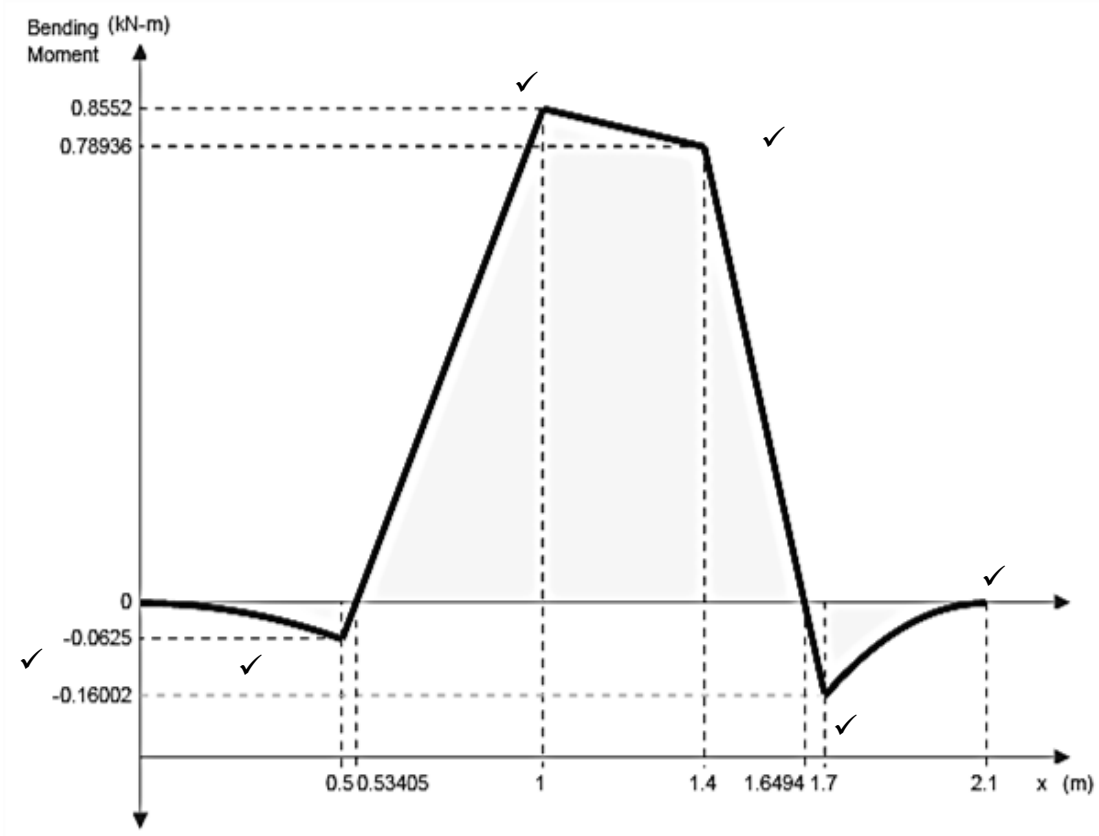

BENDING-MOMENT DIAGRAM (6)

[15]

QUESTION 3

3.1 Two parallel forces with the same magnitude acting at any distance in the opposite direction on a lever (2)

3.2

SHAPE	AREA [mm²]	X [mm]	Y [mm]	MOMENT AX [mm³]	MOMENT AY [mm³]
A	1 500,00√	25,00√	15,00√	37 500,00√	22 500,00√
B	-50,00√	13,33√	3,33√	-666,5√	-166,5√
C	-78,54√	15,00√	20,00√	-1 178,57√	-1 571,43√
D	-25,00√	47,50√	7,50√	-1 187,50√	-187,50√
TOTAL	**1 346,46✓**			**34 467,9✓**	**20 575,20✓**

$\bar{X} = \frac{\sum AX}{\sum A}\surd$

$= \frac{34\ 467,9}{1\ 346,46}$✓

$= 25,599$ mm✓

$\bar{Y} = \frac{\sum AY}{\sum A}\surd$

$= \frac{20\ 575,20}{1\ 346,46}$✓

$= 15,281$ mm✓ (18)

[20]

QUESTION 4

4.1 $\Sigma M_{RR} = 0$

$12R_L = 8 \times 9 + 5 \times 6 + 4 \times 3$

$R_L = 114/12$

$R_L = 9,5$ kN✓

$\Sigma M_{RL} = 0$

$12R_R = 8 \times 3 + 6 \times 5 + 9 \times 4$

$R_R = 90/12$

$R_R = 7,5$ kN✓ (2)

4.2

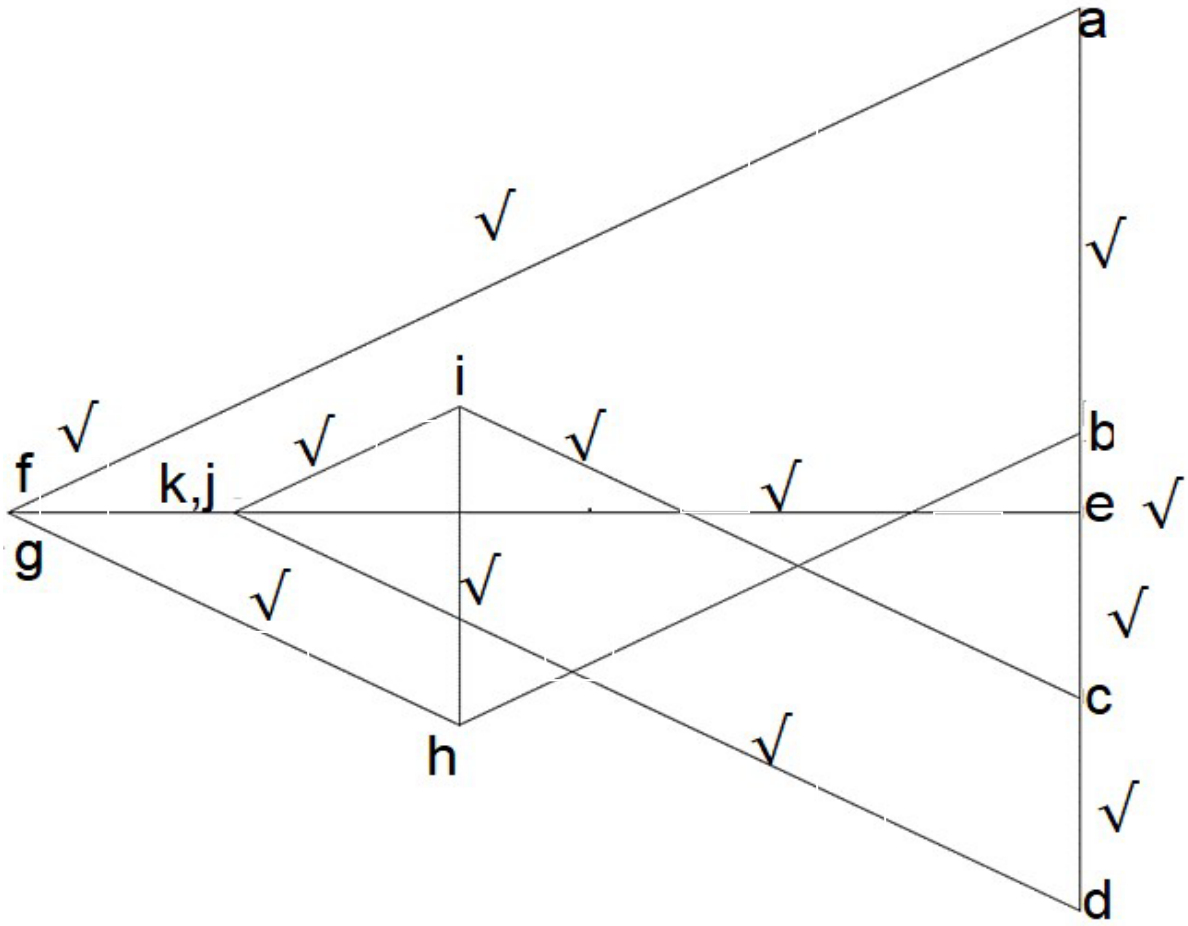

MEMBER	MAGNITUDE (kN)	NATURE
AF	21,2√	STRUT√
BH	12,3√	STRUT√
CI	12,3√	STRUT√
DK	16,7√	STRUT√
EF	19√	TIE√
EG	19√	TIE√
FG	0√	REDUNDANT√
GH	9√	STRUT√
HI	6√	TIE√
IJ	4,4√	STRUT√
EJ	15√	TIE√
JK	0√	REDUNDANT√

+/- 2 tolerance

(12 × ½ + 12) (18)
[20]

QUESTION 5

5.1 Ohm's law states that the current through a conductor under constant conditions✓ is proportional to the potential difference (voltage) across the conductor.✓

$I = V/R$✓

Where: V: voltage (volts)
I: current (amps)
R: resistance (Ω) (3)

5.2 The purpose of the earth wire is to prevent electrocution✓ by providing a safe route for current to flow if the live wire comes lose and get into contact with a metal casing.✓ (2)

5.3 $R_1 = 63 + 37 + 71 = 171\ \Omega$✓
$R_2 = 17\ \Omega$✓
$R_3 = 13 + 33 + 20 = 66\ \Omega$✓

$1/R_T = 1/R_1 + 1/R_2 + 1/R_3$
$= 1/171 + 1/17 + 1/66$✓
$= 0,08$✓
$R_T = 12,5\ \Omega$✓ (6)
[11]

QUESTION 6

6.1 $F// = W\sin\theta$
$= 55 \times 9,81 \times \sin30°$✓
$= 269,78$ N✓✓

6.2 $F\perp = W\cos\theta$
$= 55 \times 9,81 \times \cos30°$✓
$= 467,26$ N✓✓

6.3 $F_\mu = \mu \times W\cos\theta$✓
$= 0,5 \times 55 \times 9,81 \times \cos30°$✓
$= 233,63$ N✓

6.4 $F_{up} = \mu \times W\cos\theta + W\sin\theta$✓
$= 233,63 + 269,78$✓
$= 503,41$ N✓

(4 × 3) **[12]**

QUESTION 7

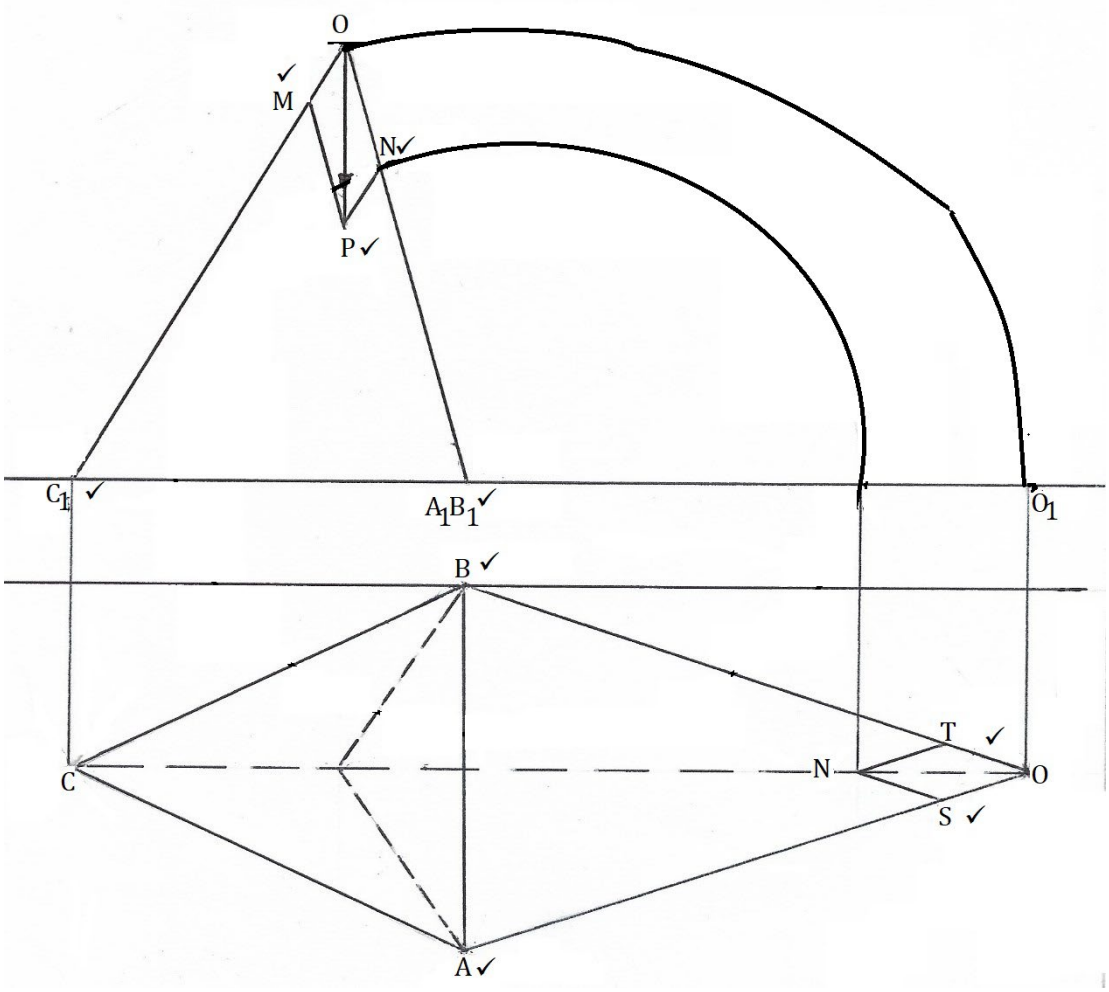

OM =OC = 11 kN✓
OS = OA = 12 kN✓
OT = OB = 12 kN✓

Tolerance +/- 1 **[12]**

TOTAL: 100

Copyright reserved