higher education & training

Department:
Higher Education and Training
REPUBLIC OF SOUTH AFRICA

MARKING GUIDELINE

NATIONAL CERTIFICATE

BUILDING DRAWING N3

28 November 2024

This marking guideline consists of 11 pages.

Copyright reserved

QUESTION 1: BRICKWORK – ENGLISH BOND

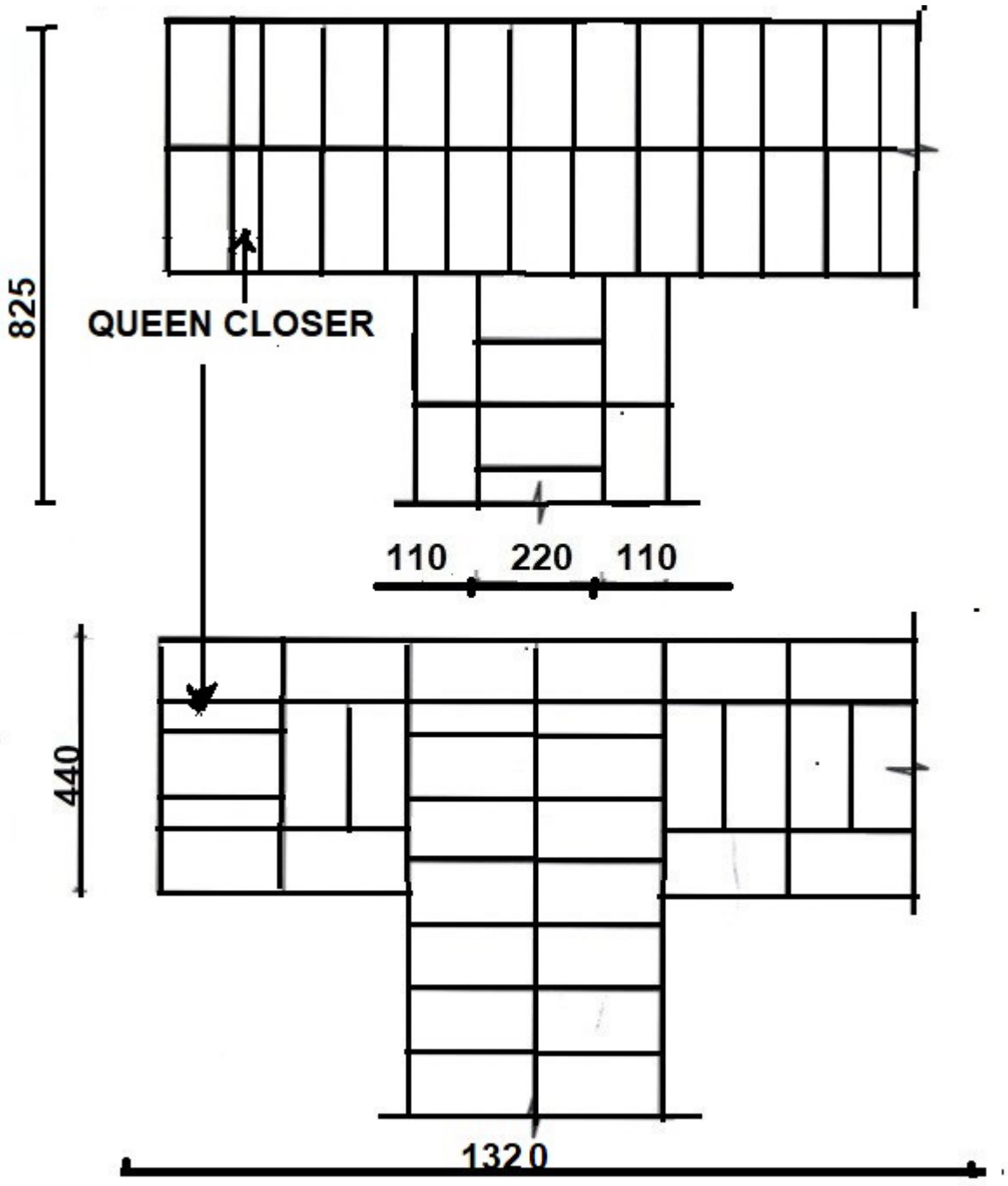

ALTERNATIVE PLAN COURSES OF A T-JUNCTION BUILT IN ENGLISH BOND
SCALE 1:10

QUESTION 1						
Part of drawing	**Making criteria**	**Possible mark**	**Marker**	**Internal moderator**	**External moderator**	
Alternative courses	Correct position	4				
	Bond	4				
	Dimension	4				
	Labelling	2				
Subtotal		**14**				
Divided by		**2**				
Overall correctness		**7**				
Accuracy		**1**				
Line work		**1**				
Balanced layout and neatness		**1**				
TOTAL:		**10**				**[10]**

QUESTION 2: ROOF

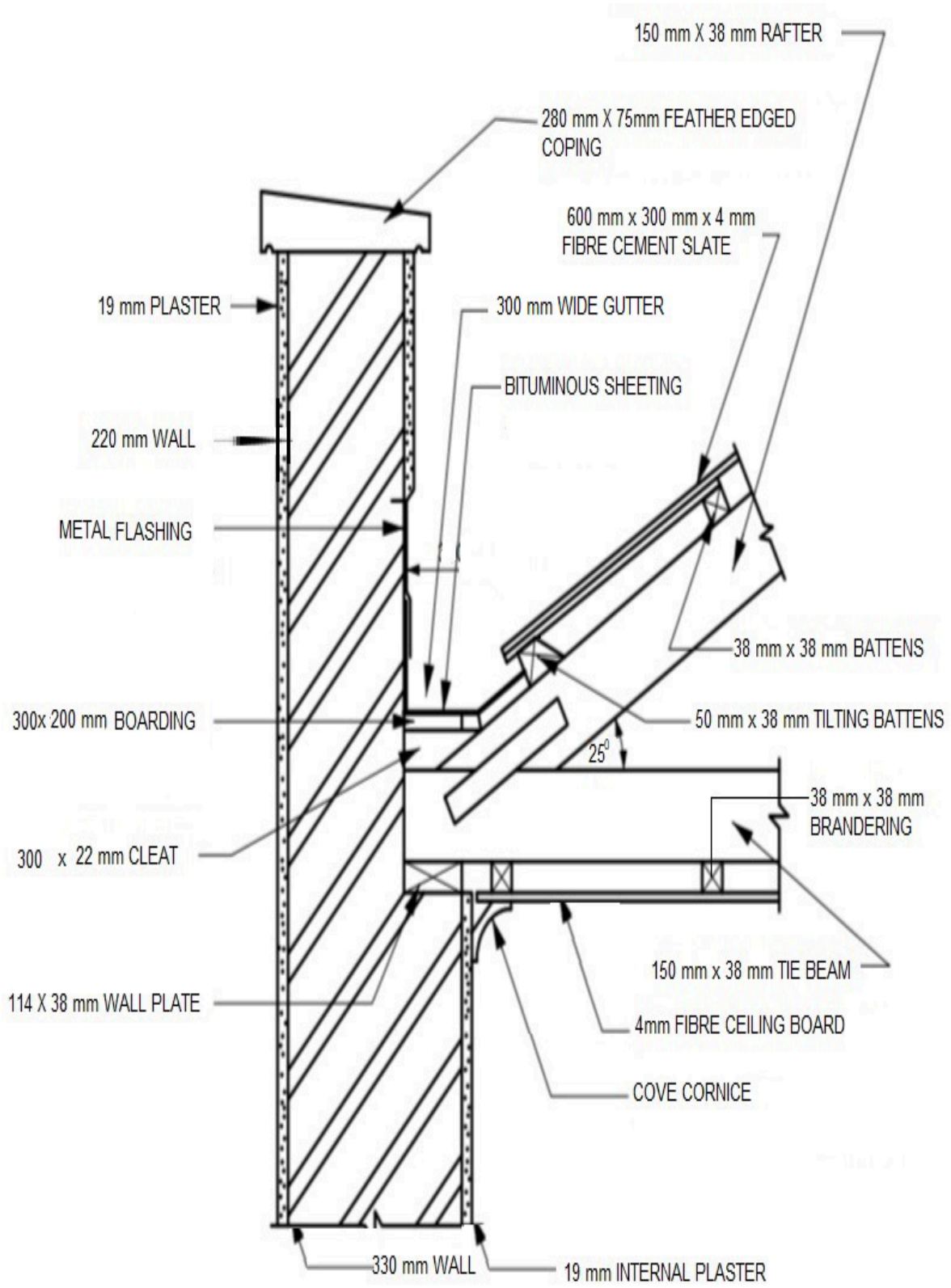

VERTICAL SECTION THROUGH PARAPET GUTTER
SCALE 1:10

QUESTION 2						
Part of drawing	**Marking criteria**	**Possible mark**	**Marker**	**Internal moderator**	**External moderator**	
Wall, plaster, coping	Correct position	5				
	Labelling	5				
	Dimensions	5				
	Hatching	4				
Rafter, wall plate, tie beam, batten, tilting batten, roof covering	Correct position	6				
	Labelling	6				
	Dimensions	6				
	Hatching	3				
Gutter, cleat, flashing, bituminous sheeting	Correct position	4				
	Labelling	4				
	Dimensions	2				
Cornice, ceiling, brandering	Correct position	3				
	Labelling	3				
	Dimensions	3				
	Hatching	1				
Subtotal		**60**				
Divided by		**4**				
Overall correctness		**15**				
Accuracy		**2**				
Line work		**1**				
Balance layout and neatness		**2**				
TOTAL:		**20**				**[20]**

QUESTION 3: CONCRETE STAIRCASE

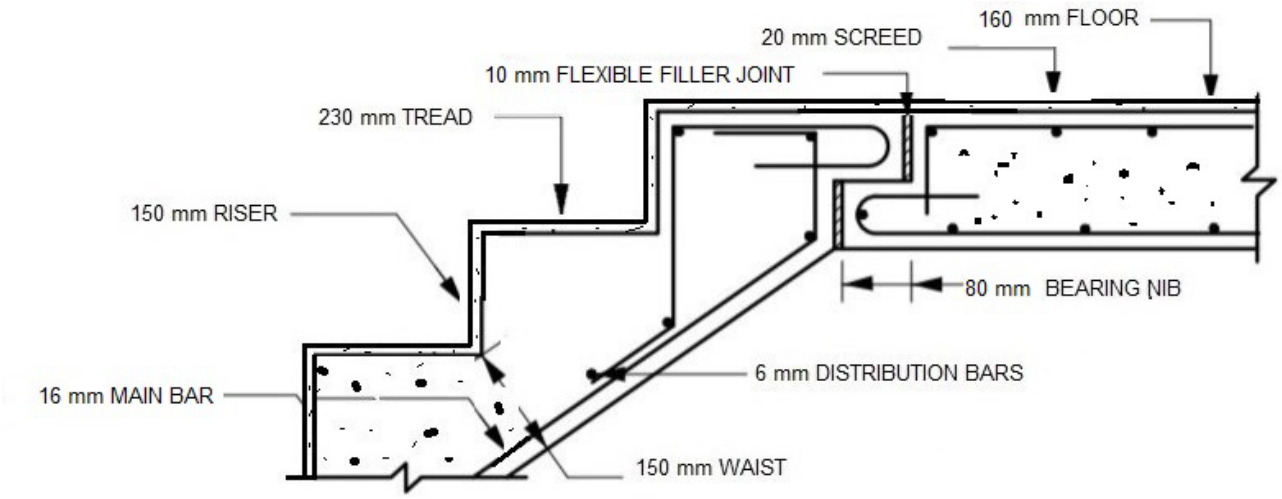

VERTICAL SECTION THROUGH PRECAST CONCRETE STAIRS
SCALE 1:10

QUESTION 3						
Part of drawing	**Marking criteria**	**Possible mark**	**Marker**	**Internal moderator**	**External moderator**	
Floor, screed, tread, rise	Correct position	4				
	Labelling	4				
	Dimensions	4				
	Hatching	2				
Flexible filler joint, bearing nib, waist	Correct position	3				
	Labelling	3				
	Dimensions	3				
	Hatching	1				
Main bar, distribution bar	Correct position	2				
	Labelling	2				
	Dimensions	2				
Subtotal		**30**				
Divided by		**2**				
Overall correctness		**15**				
Accuracy		**2**				
Line work		**1**				
Balance layout and neatness		**2**				
TOTAL:		**20**				**[20]**

QUESTION 4: PLUMBING

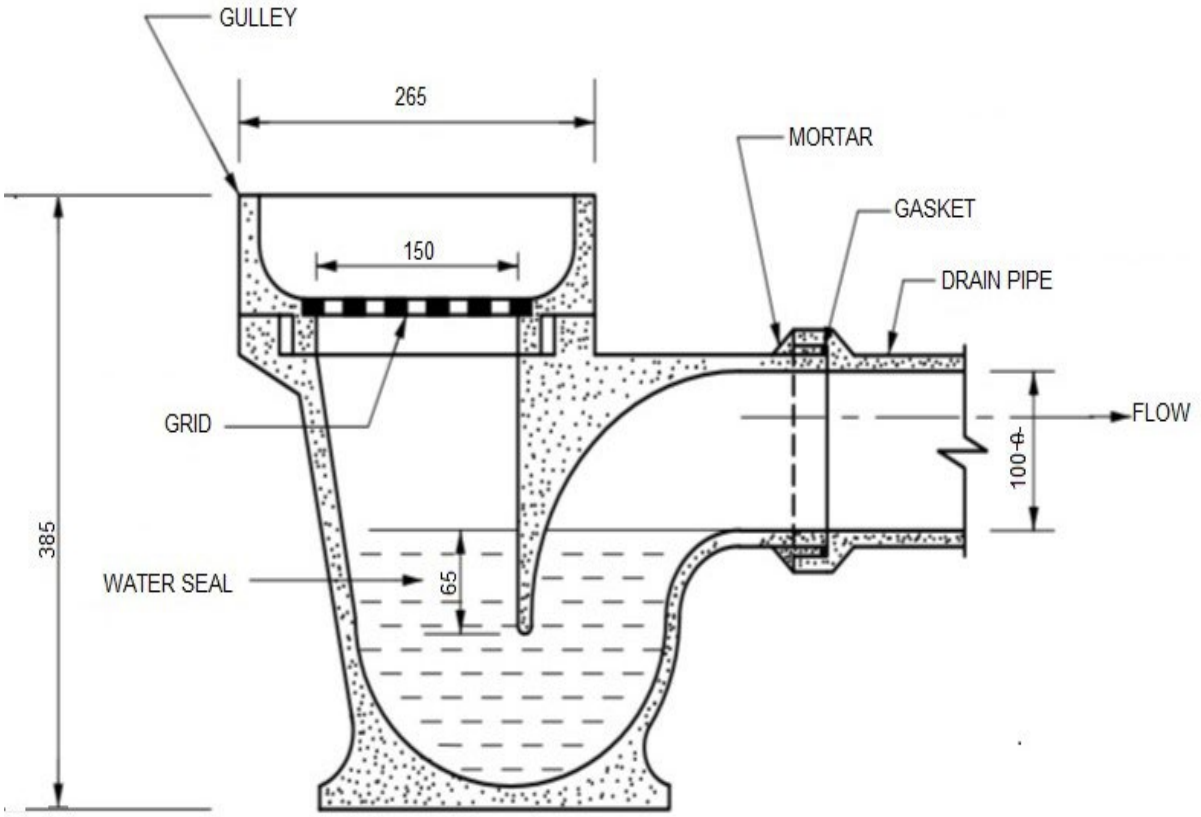

EARTHENWARE GULLEY
SCALE 1:5

QUESTION 4					
Part of drawing	**Making criteria**	**Possible mark**	**Marker**	**Internal moderator**	**External moderator**
Drainpipe, water flow, grid	Correct position	3			
	Labelling	3			
	Dimension	1			
	Hatching	2			
Gulley, water seal, gasket, mortar	Correct position	4			
	Labelling	4			
	Dimension	4			
	Hatching	1			
Subtotal		**22**			
Divided by		**3,143**			
Overall correctness		**7**			
Accuracy		**1**			
Line work		**1**			
Balance layout and neatness		**1**			
TOTAL:		**10**			

[10]

QUESTION 5: BASEMENT SUSPENDED FLOOR

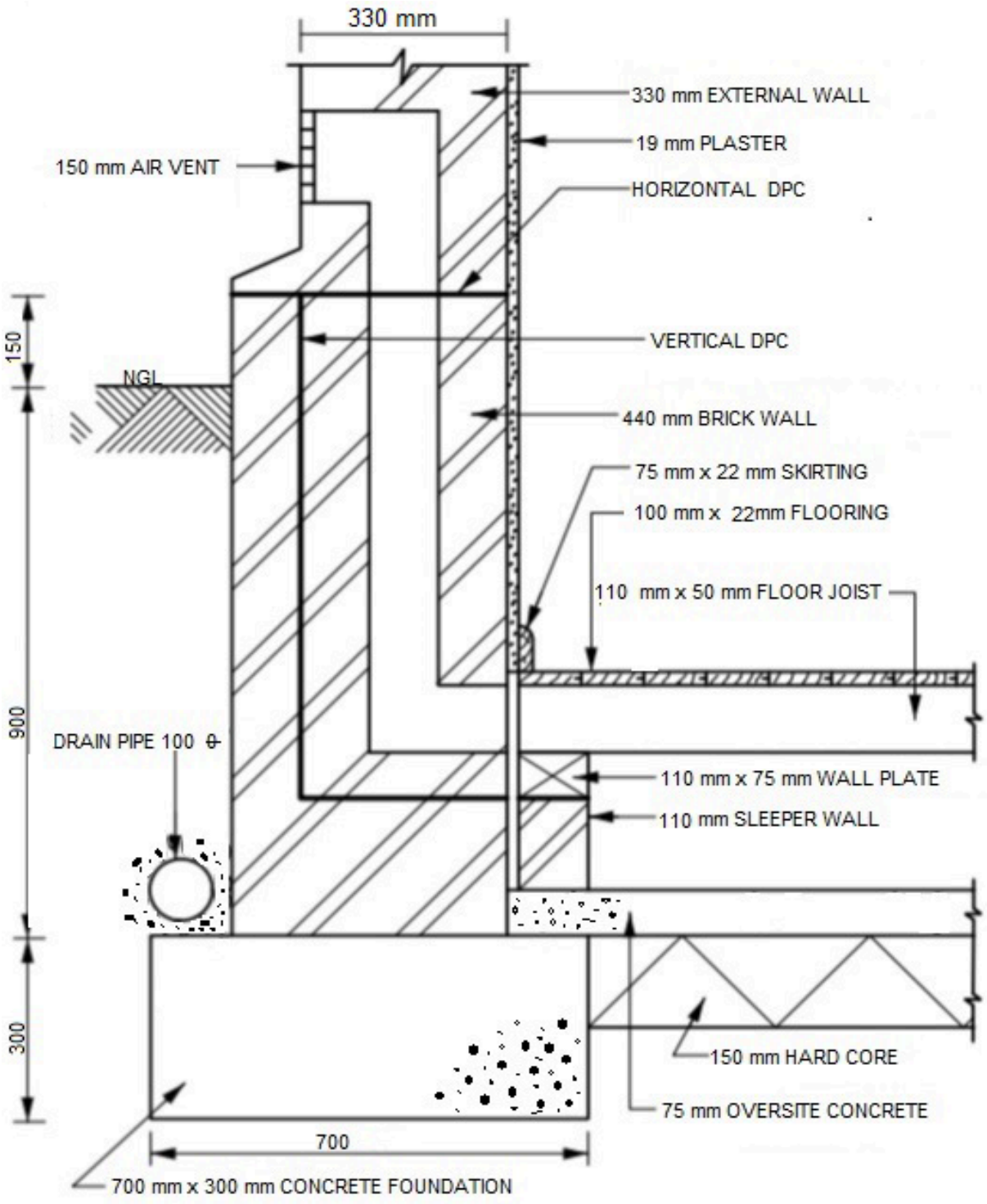

VERTICAL SECTION THROUGH BASEMENT SUSPENDED FLOOR
SCALE 1:10

Copyright reserved

QUESTION 5						
Part of drawing	**Making criteria**	**Possible mark**	**Marker**	**Internal moderator**	**External moderator**	
Foundation, hard core, oversite concrete, drainpipe	Correct position	4				
	Labelling	4				
	Dimension	4				
	Hatching	3				
Sleeper wall, wall plate, floor joist and flooring skirting and NGL	Correct position	6				
	Labelling	6				
	Dimension	6				
	Hatching	5				
Vertical DPC, horizontal DPC, air vent, walls	Correct position	5				
	Labelling	5				
	Dimension	5				
	Hatching	3				
Subtotal		**56**				
Divided by		**3,73**				
Overall correctness		**15**				
Accuracy		**2**				
Line work		**1**				
Balance layout and neatness		**2**				
TOTAL:		**20**				**[20]**

QUESTION 6: JOINERY – SOLID JAM

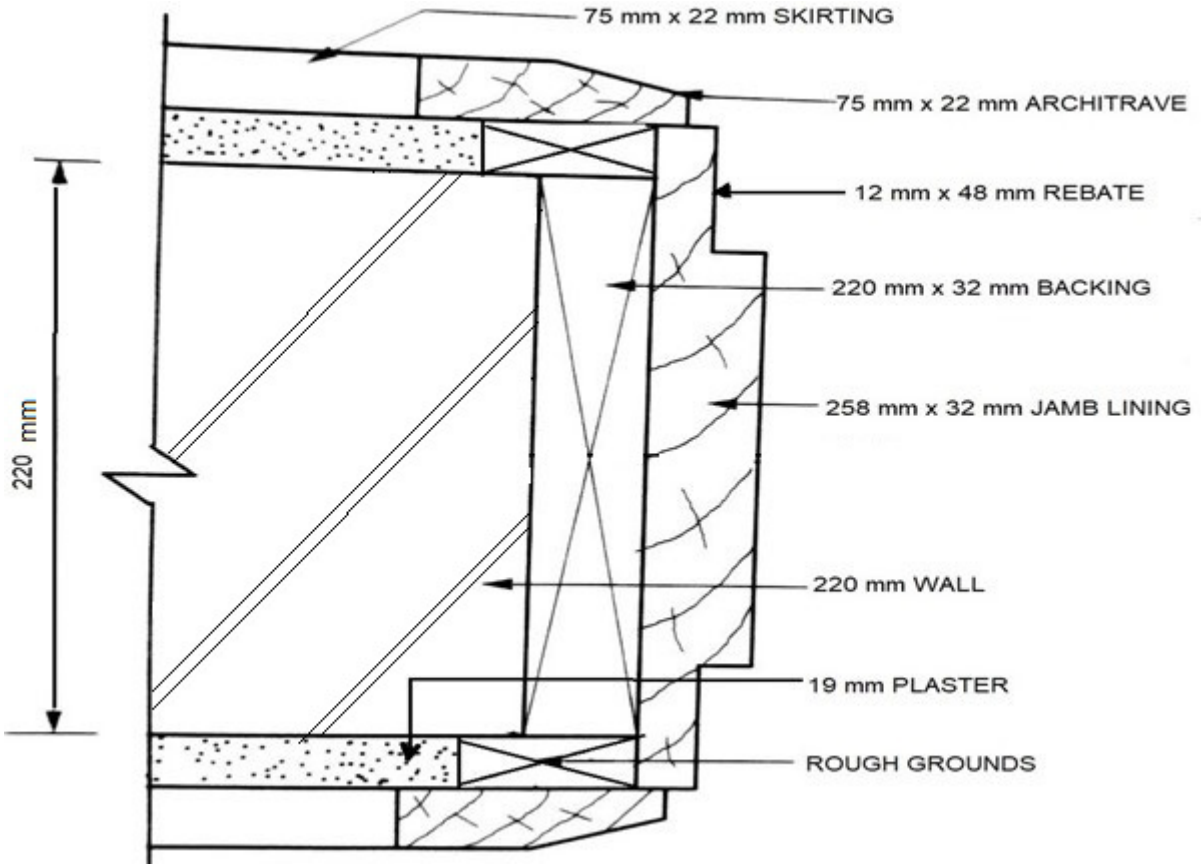

HORIZONTAL SECTION THROUGH A DOUBLE-REBATED SOLID DOORJAMB
SCALE 1:2

QUESTION 6					
Part of drawing	**Marking criteria**	**Possible mark**	**Marker**	**Internal moderator**	**External moderator**
Plaster, rough grounds, skirting, architrave, rebate	Correct position	10			
	Labelling	5			
	Dimensions	5			
	Hatching	3			
Wall, backing, jamb lining	Correct position	3			
	Labelling	3			
	Dimensions	3			
	Hatching	3			
Subtotal		**35**			
Divided by		**5**			
Overall correctness		**7**			
Accuracy		**1**			
Line work		**1**			
Balance layout and neatness		**1**			
TOTAL:		**10**			

[10]

QUESTION 7: PLASTERWORK AND PAINTING

7.1 True
7.2 True
7.3 True
7.4 True
7.5 True
7.6 True
7.7 False
7.8 False
7.9 False
7.10 True

(10 × 1) **[10]**

TOTAL: 100

Copyright reserved