higher education & training

Department:
Higher Education and Training
REPUBLIC OF SOUTH AFRICA

MARKING GUIDELINE

NATIONAL CERTIFICATE

RADIO THEORY N2

28 November 2024

This marking guideline consists of 5 pages.

Copyright reserved

QUESTION 1

1.1 True
1.2 False
1.3 False
1.4 True
1.5 False
1.6 True
1.7 True
1.8 True
1.9 False
1.10 False

(10 × 1) **[10]**

QUESTION 2

2.1 L
2.2 G
2.3 F
2.4 H
2.5 J
2.6 B
2.7 I
2.8 D
2.9 A
2.10 M

(10 × 1) **[10]**

QUESTION 3

3.1 3.1.1

$$T = RC = (100 \times 10^3) \times (20 \times 10^{-9}) \checkmark$$
$$= 0{,}002 \text{ seconds} \checkmark$$

(2)

3.1.2

$$V_c = 9\left(1 - e^{\frac{-0{,}002}{0{,}002}}\right) \checkmark$$
$$= 9\left(1 - e^{-1}\right)$$
$$= 9(1 - 0{,}367879) \checkmark$$
$$= 9(0{,}632) \checkmark$$
$$= 5{,}688V \checkmark$$

(4)

3.1.3

$$V_R = V_{DC} - V_C \checkmark$$
$$= 9 - 5{,}688 \checkmark$$
$$= 3{,}312V \checkmark$$

(3)

3.2 3.2.1

$$fr = \frac{1}{2\pi\sqrt{LC}}$$

$$= \frac{1}{2\pi\sqrt{100\times10^{-3}\times50\times10^{-6}}} \checkmark$$

$$= \frac{1}{0{,}014049629} \checkmark$$

$$= 71{,}146Hz \checkmark$$

3.2.2

$$Q = \frac{1}{R}\sqrt{\frac{L}{C}}$$

$$= \frac{1}{10}\sqrt{\frac{100\times10^{-3}}{50\times10^{-6}}} \checkmark$$

$$= \frac{1}{10} \times 44{,}727 \checkmark$$

$$= 4{,}473 \checkmark$$

(2 × 3) (6)

3.3
- XL = XC
- Z = Minimum **OR** Z = R
- VL = VC
- VT = VR
- Current maximum
- Phase angle = zero

(Any 5 × 1) (5)
[20]

QUESTION 4

4.1 When current flows in the coil, it causes the coil to move✓ in the magnetic field of the permanent magnet.✓ As the pointer is fixed to the coil,✓ the pointer also moves.✓ The pointer will point to the amount of current, which can be seen on the scale.✓ (5)

4.2 4.2.1 Chooses the vertical scale

4.2.2 Chooses the horizontal scale

4.2.3 Makes the trace on the screen brighter or dimmer

4.2.4 Moves the trace up or down (vertical)

4.2.5 Moves the trace left or right (horizontal)

(5 × 1) (5)
[10]

QUESTION 5

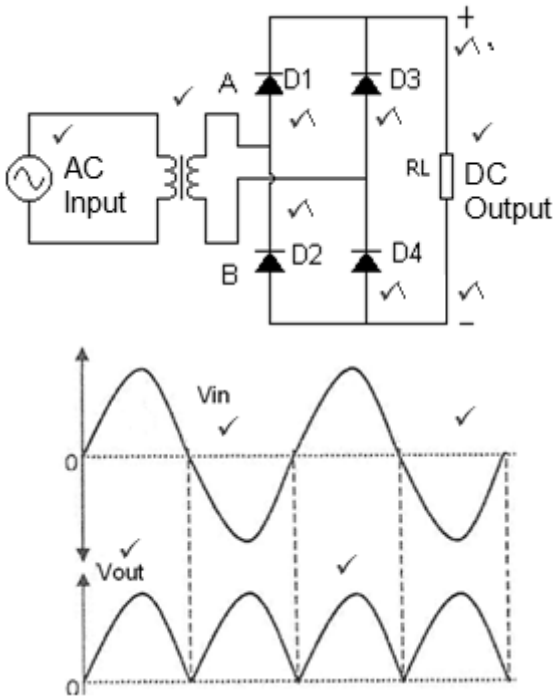

[10]

QUESTION 6

6.1

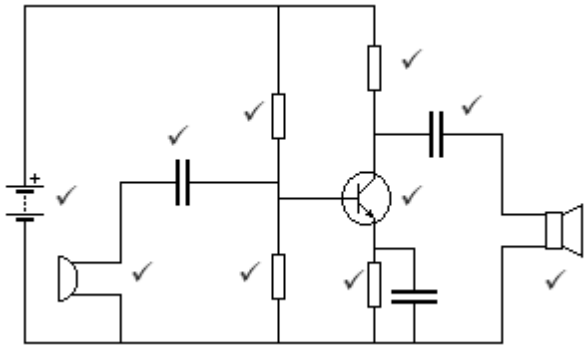

(10)

6.2 (a) low
(b) low
(c) medium
(d) medium
(e) 180°

(5 × 1) (5)

[15]

QUESTION 7

Sound waves strike the ribbon,✓ causing the ribbon to move in the magnetic field of the permanent magnet.✓✓ This produces an electrical signal in the output.✓✓

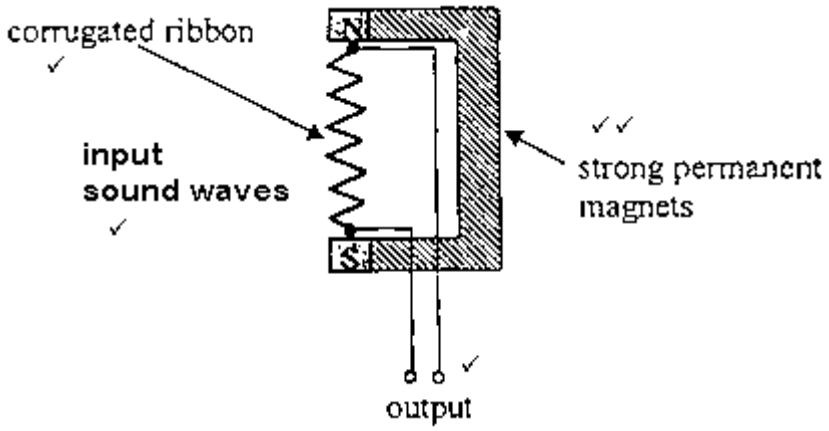

[10]

QUESTION 8

8.1



(5)

8.2
- Oscilloscope
- Multimeter
- AF signal generator
- RF signal generator
- Function signal generator
- Spectrum analyser
- Sweep generator
- Signal injector
- Signal tracer

(Any 6 × 1) (6)

8.3 The ability of a radio receiver to select a particular frequency from a range of frequencies✓ and to reject all other unwanted frequencies. ✓ (2)

8.4 The ability of a receiver to receive ✓and amplify weak signals. ✓ (2)

[15]

TOTAL: 100

Copyright reserved