higher education & training

Department:
Higher Education and Training
REPUBLIC OF SOUTH AFRICA

MARKING GUIDELINE

NATIONAL CERTIFICATE

BUILDING AND STRUCTURAL CONSTRUCTION N6

22 November 2024

Note to markers:

This marking guideline conforms to:

- SANS 10 100 (2000) Part 1 Design (The structural use of concrete).
- SANS 0162 (1984) (The structural use of steel).
- Alternate answers must be considered.
- The marker must check the candidate's method of obtaining the answer.
- Subtract 1 (ONE) mark per answer where references and clauses are not stated.
- Markers to use own discretion.

This marking guideline consists of 11 pages.

Copyright reserved

QUESTION 1

I–section parallel flange
356 × 171 × 56,7 kg/m:

$I_{xx} = 160,6 \times 10^{-6}\ m^4$

$h/2$ = 358,6 / 2 = 179,3 mm

Bending stress = 164 MPa

Self-weight of the beam:

$$W = 56,7\ \text{kg/m} \times 9,81 \times 10^{-3}$$

$$\text{Weight} = 0,556\ \text{kN/m}\ \checkmark$$

Bending moment maximum:

$$\frac{M}{I} = \frac{F}{Y}$$

$$M = \frac{f \times I}{y}$$

$$M = \frac{164 \times 106,6 \times 10^6}{179,3}\ \checkmark$$

$$M = 97,5\ \text{kN m}\ \checkmark$$

Equate to bending moment above:

$$BM = \frac{Wl^2}{8} + \frac{WL}{4}\ \checkmark$$

$$97,5 = \frac{0,556 \times 12^2}{8} + \frac{P \times 12}{4}\ \checkmark$$

$$97,5 = 10 + 3P\ \checkmark$$

$$P = \frac{97,5 - 10}{3}$$

$$P = 29,2\ \text{kN}\ \checkmark$$

[6]

QUESTION 2

Given Info:

I-section: 406 x 140 x 46,3 kg/m Iyy = 5,404 x 10^{-6} m^4 Area = 5,9 x 10^{-3} m^2 t_1 = 6,9 mm	2/Flange plates: 300 mm x 18 mm $I_{xx} = (\frac{bd^3}{12}) = (\frac{0,3\ x\ 0,018^3}{12}) =$ 0,146 x 10^{-6} m^4 Area = 0,3 x 0,018 = 5,4 x 10^{-3} m^2 2 Plates = 2 x 5,4 10^{-3} m^2 = 10,8 10^{-3} m^2
Total area = 5,4 x 10^{-3} m^2 + 9,0 x 10^{-3} m2 + 5,4 x 10^{-3} m^2 + 5,9 x 10^{-3} m^2 Total area = 25,7 x 10^{-3} m^2	Web plate: 200 mm x 25 mm $I_{xx} = \frac{bd^3}{12} = \frac{0,02\ x\ 0,45^3}{12} =$ 151,875 x 10^{-6} m^4 Area = 0,45 x 0, 02 = 9,0 x 10^{-3} m^2

Neutral axis using area moments from bottom

Flange 1: 5,4 x 10^{-3} m^2 x 0,009 = 0,0486 x 10^{-3} m^2 ✓

Web: 9,0 x 10^{-3} m^2 x 0,0405 = 0,365 x 10^{-3} m^2 ✓

Flange 2: 5,4 x 10^{-3} m^2 x 0,447 = 2,413 x 10^{-3} m^2 ✓

Steel beam: = 5,9 x 10^{-3} m^2

Total area = 8,73 x 10^{-3} m^2 ✓

$Y_1 = \frac{8,73x\ 10^{-3}\ m^2}{25,7\ x\ 10^{-3}\ m^2}$ ✓

Y_1 = 0,33968 m = 339,7 mm✓

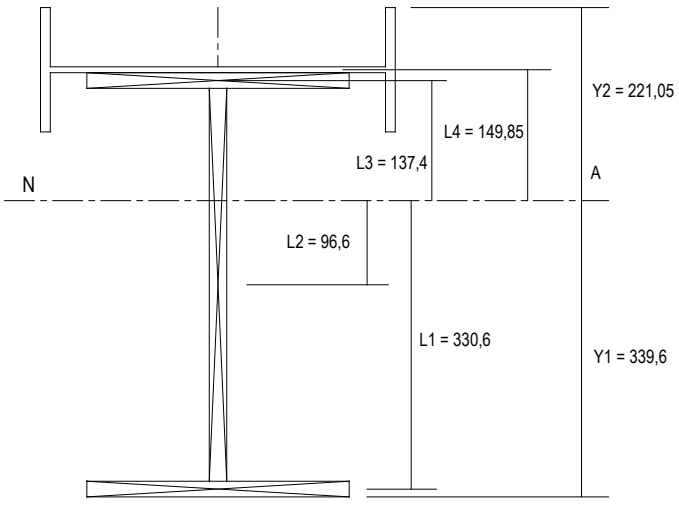

Copyright reserved

L1 $= 339,7 - \frac{18}{2} = 330,7$	L2 $= 220,95 - 71,2 - \frac{6,9}{2} - 18 - 225 = 96,7$
L2 $= 339,7 - 18 - 225 = 96,7$	L3 $= 220,95 - 71,2 - \frac{6,9}{2} - 9 = 137,3$
L3 $= 339,7 - 18 - 450 - \frac{18}{2} = 137,3$	L4 $= 220,95 - 71,2 - \frac{6,9}{2} - 9 = 137,3$
L4 $= 339,7 - 18 - 450 - 18 - \frac{6,9}{2} = 149,85$	

Second moment of area

$I_{xx\,tot} = (Ixx\ Flange + al^2) + (Ixx\ Web + al^2) + (Ixx\ Flange + al^2) + (Iyy\ Ibeam + al^2)$

$I_{xx\,Flange} = (0,146\ x\ 10^{-6} + 5,4\ x\ 10^{-3}\ x\ 0,3306^2)$ ✓

$= (0,146\ x\ 10^{-6} + 590\ x\ 10^{-6})$ $= \underline{590,146 \text{ x } 10^{-6}\ m^4}$ ✓

$I_{xx\,Web} = (0,26\ x\ 10^{-6} + 9,0\ x\ 10^{-3}\ x\ 0,0966^2)$ ✓

$= (0,26\ x\ 10^{-6} + 83,98\ x\ 10^{-6})$ $= \underline{84,24 \text{ x } 10^{-6}\ m^4}$ ✓

$I_{xx\,Flange} = (0,146\ x\ 10^{-6} + 5,4\ x\ 10^{-3}\ x\ 0,1373^2)$ ✓

$= (0,146\ x\ 10^{-6} + 101,78\ x\ 10^{-6})$ $= \underline{101,94 \text{ x } 10^{-6}\ m^4}$ ✓

$I_{xx\,Ibeam} = (5,404\ x\ 10^{-6} + 5,9\ x\ 10^{-3}\ x\ 0,14985^2)$ ✓

$= (5,404\ x\ 10^{-6} + 132,84\ x\ 10^{-6})$ $= \underline{137,89 \text{ x } 10^{-6}\ m^4}$ ✓

$I_{xx\,total} = \underline{914,22 \text{ x } 10^{-6}\ m^4}$ ✓

Bending moment maximum (Bending stress = 162 MPa)

$\frac{M}{I} = \frac{f}{y}$ where $M = \frac{I\ x\ f}{y}$

$BM_{max} = \frac{162\ x\ 914,22\ x10^6}{339,6}$ ✓

$BM_{max} = 436,11\ kNm$ ✓

Self-weight of the beam Density of steel = 7870 kg/m^3

Flange: 0,3 x 0,018 x 7 870 x 9,81 x 10^{-3} = 0,417 kN/m ✓

Web: 0,45 x 0,02 x 7 870 x 9,81 x 10^{-3} = 0,695 kN/m ✓

Flange: 0,3 x 0,018 x 7 870 x 9,81 x 10^{-3} = 0,417 kN/m ✓

I-beam: 46,3 kg/m x 9,81 x 10^{-3} = 0,454 kN/m ✓

Total self-weight = 1,98 kN/m ✓

Copyright reserved

Maximum UDL that the girder beam supports

$$\text{BM} = \frac{W\,l^2}{8} + \frac{W\,l^2}{4}$$

$$436{,}11 = \frac{1{,}98\,x\,12^2}{8} + \frac{W\,x\,12^2}{4} \quad ✓$$

$$436{,}11 = 22{,}34 + 1{,}38\,\text{W}$$

$$W = \frac{436{,}11 - 2{,}38}{1{,}38}$$

$$W = 11{,}49\ \text{kN/m}^2 \quad ✓$$

[24]

QUESTION 3

All references taken from SANS 10100-1 (2000).

Fcu = 25 MPa	Table 2 (4.1.5.1)
Fy = 450 MPa	Table 3 (4.1.5.2)

Nett area of the column

$$\text{Area} = (330 \times 270) + (270\ \text{x}\ 60) \quad ✓$$
$$= 98\,100 + 16\,200$$
$$\text{Area} = 105\,300\ \text{mm}^2 \quad ✓$$

Longitudinal compression reinforcement

$$\text{N} = 0{,}4\ \text{fcu Ac} + 0{,}67\ \text{fy Asc} \qquad \text{(Clause 4.7.4.3)}$$

$$2\,200 \times 10^3 = (0{,}4 \times 25 \times 105\,300) + (0{,}67 \times 450 \times \text{Asc}) \quad ✓$$

$$2\,200 \times 10^3 = 1\,053\,000 + (301{,}5\ \text{Asc})$$

$$\text{Asc} = \frac{2\,200\,x\,10^3 - 1\,053\,000}{301{,}5} \quad ✓$$

$$\text{Asc} = 3\,804\ \text{kN} \quad ✓ \quad \text{Use 8Y25 main bars (Asc} = 3\,927\ \text{mm}^2\text{)} \quad ✓$$

Minimum reinforcement required

Minimum area of main steel: 0,4% AC (Table 23)

$$0{,}4\% \times 105\,300 \quad ✓$$

$$\text{Minimum area} = 421{,}2\ \text{mm}^2 \quad ✓$$

Maximum: 6% of gross cross-sectional area

$$6\% \times 105\,300 = 613{,}8\ \text{mm}^2 \quad ✓$$

Copyright reserved

Diameter and spacing of the binders

Binders: ¼ of the smallest main bar (Clause 4.11.4.5.1)

¼ × 25 = 6,25 mm (not available)

Use: min R8 binders. ✓ (R6 Discontinued)

Spacing of binders

12 × dia of main bar

12 × 25 = 300 mm ✓

Use spacing of 300 mm. ✓

[12]

QUESTION 4

4.1 The reactions

Fulcrum at RR

$(RR \times 12) = (45 \times 10) + (60 \times 8) + (80 \times 6) + (55 \times 4) + (55 \times 2)$ ✓

$= 450 + 480 + 480 + 220 + 110$

$= \frac{1740}{12}$

RR = 145 kN ✓

Fulcrum at RL

$(RL \times 12) = (55 \times 10) + (55 \times 8) + (80 \times 6) + (60 \times 4) + (45 \times 2)$ ✓

$= 550 + 440 + 480 + 240 + 90$

$= \frac{1\,800}{12}$

RL = 150 kN ✓

4.2 Joint at 'T'

$\Sigma Vc = 0$

AH Sin 30° = 150 kN

AH $= \frac{150}{\text{Sin } 30^\circ}$ ✓

AH = 300 kN ✓ Compression (Strut) ✓

Σ Hc = 0

P Cos 30º = HG

HG = 300 × Cos 30º ✓

HG = 259,8 kN ✓ Tension (Tie) ✓

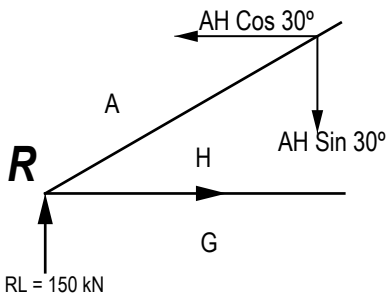

4.3

Joint at 'S'

$\Sigma Vc = 0$

$AH \sin 30º + HJ \sin 30º = 45\ kN + BJ \sin 30º$ ✓

$150 + 0{,}5\ HJ = 45 + 0{,}5\ BJ$

$(150 - 45) + 0{,}5\ HJ = 0{,}5\ BJ$ ✓

$HJ = \frac{105 + 0{,}5\ HJ}{0{,}5}$

$BJ = 210 + HJ$ ..... ✓

$\Sigma Hc = 0$

$AH \cos 30º = BJ \cos 30º + HJ \cos 30º$ ✓

$259{,}8 = 0{,}866\ BJ + 0{,}866\ HJ$

$259{,}8 = 0{,}866(210 + HJ) + 0{,}866\ HJ$ ✓

$259{,}8 - 181{,}86 = 1{,}732 HJ$

$HJ = \frac{78}{1{,}732} = 45\ kN$ ✓ Compression (Strut) ✓

And:

BJ = 210 + HJ

BJ = 210 + 45

BJ = 255 kN ✓

Strut ✓

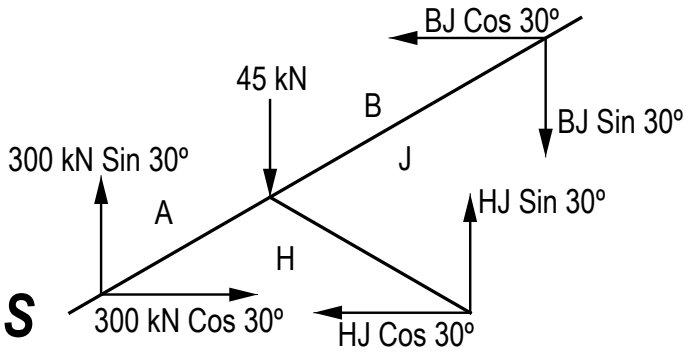

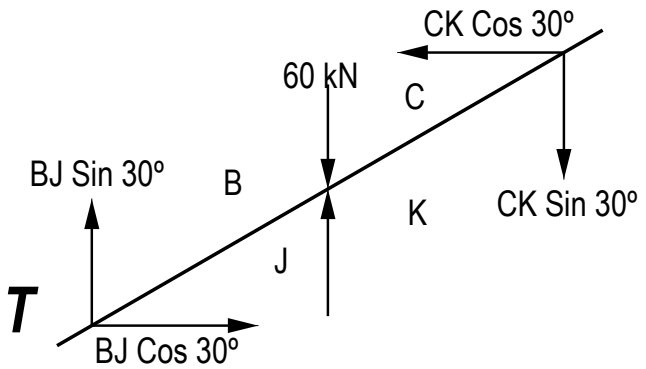

4.4 Joint at 'T'

$\Sigma Vc = 0$

$BJ \sin 30º + HK = 60\ kN + CK \sin 30º$ ✓

$255 \sin 30º + JK = 60 + 0{,}5\ CK$

$JK = 60 + 0{,}5\ CK - 127{,}5$

$JK = -67{,}5 + 0{,}5\ CK$ ……✓

$\Sigma Hc = 0$

$BJ \cos 30º = CK \cos 30º$ ✓

$0{,}866 \times 255 = 0{,}866\ CK$

$CK = \frac{220{,}83}{1{,}732}$

$CK = 255\ kN$ ✓ Compression (Strut) ✓

and

$JK = -67{,}5 + 0{,}5(255)$

$JK = 60\ kN$ ✓ Compression (Strut) ✓

[26]

QUESTION 5

Fcu = 25 MPa	Table 2 (4.1.5.1)
Fy = 450 MPa	Table 3 (4.1.5.2)
Span = 9,0 metres	Clause 4.3.1.2
Density of reinforced concrete	2 410 kg/m

5.1 Dead load = Volume × density × 9,81 × 10^{-3}
= 0,535 × 0,3 × 1 × 2 410 kg/m³ × 9,81 × 10^{-3}
= 3,794 kN/m ✓

Design dead load = 3,794 × 1,2 Gn = 4,553 kN/m ✓ (cl 4.2.2.1)

Design imposed load = 11 kN/m × 1,6Qn = 17,6 kN/m ✓

5.2 The reactions at RR and RL

Fulcrum at RL

$(\text{RR} \times 9) = (11 \times 9 \times 4{,}5) + (96 \times 6{,}5)$✓

$4\ 45{,}5 \quad + \quad 625$

$\text{RR} = \frac{1\ 069{,}5}{9}$

$\text{RR} = 118{,}83\ \text{kN}$✓

Fulcrum at RR

$(\text{RL} \times 9) = (11 \times 9 \times 4{,}5) + (96 \times 6{,}5)$✓

$4\ 45{,}5 \quad + \quad 240$

$\text{RL} = \frac{685{,}5}{9}$

$\text{RL} = 76{,}17\ \text{kN}$

The bending moments

BM B: $(76{,}17 \times 6{,}5) - (11 \times 6{,}5 \times 3{,}25) = 262{,}73\ \text{kNm}$ ✓

5.3

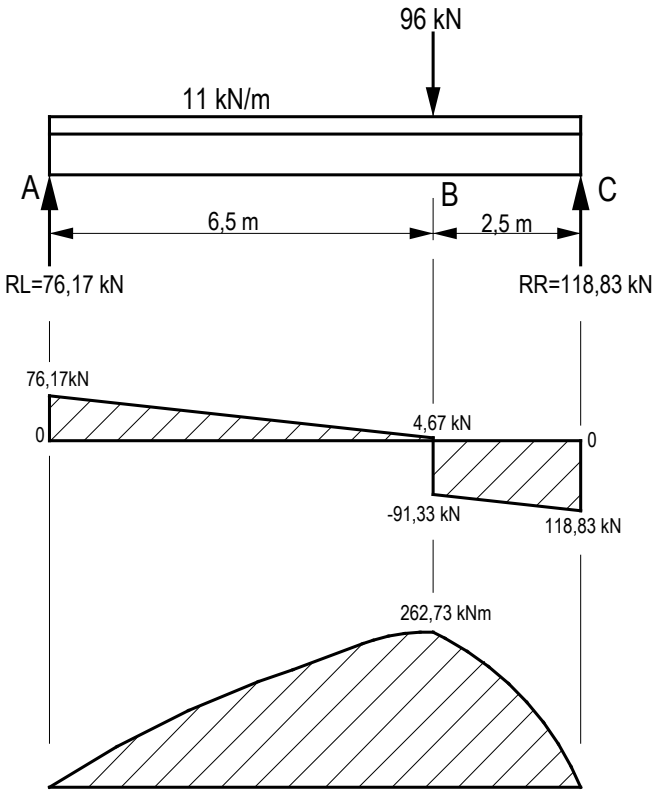

5.4

5.5 Value for 'K'

$$K = \frac{BM}{fcu\ b\ d^2}$$ (cl 4.3.3.4.1)

$$K = \frac{262{,}73\ x\ 10^6}{25\ x\ 300\ x\ 510^2}$$ ✓

RC Beam: 300 mm × 535 mm deep
minus 25 cover =
d = 510 mm

$K = 0{,}13 < K^1 = 0{,}156$

Compression steel not required.✓

Tension reinforcement only.

5.4 Distance of lever arm (Z)

$$Z = d\left\{0{,}5 + \sqrt{0{,}25 - \frac{k}{0{,}9}}\right\}$$ (cl 4.3.3.4.1)

$$Z = 510\left\{0{,}5 + \sqrt{0{,}25 - \frac{0{,}13}{0{,}9}}\right\}$$ ✓

$Z = 510\{0{,}82\}$

$Z = 420{,}7\ mm$ ✓

5.5 Tension reinforcement

$$As = \frac{M}{0{,}87\ x\ fy\ x\ z}$$ (cl 4.3.3.4.1)

$$As = \frac{262{,}73\ x\ 10^6}{0{,}87\ x\ 450\ x\ 420{,}7}$$ ✓

$As = 1595{,}2\ mm^2$ ✓

Use 4Y25 $(As = 1\ 963\ mm^2)$✓

[19]

QUESTION 6

6.1 Spraying or immersing in water, placing wet sand on the concrete or placing wet sacking (hessian) on the concrete.
(Any other suitable method must be considered) (1)

6.2 Plastic shrinkage cracking is when the rate of evaporation exceeds the rate at which moisture is supplied. (1)

6.3 Iron ore, coal, limestone and recycled steel.
(Any 2 × 1) (2)
[4]

QUESTION 7

1	2	3	4	5	6	7	8	9	10	11	12
Member	Reinforcement					Bending dimensions for shape codes (SANS 282)					
Mark; size & no. of	Mark	Type and size	No. in each	Total no.	Length (mm)	Shape code	A	B	C	D	E or R
Rectangular beam **2 of**	01 02 03	Y16 Y10 R08	3 2 25	6 4 50	5 050 5 050 400	35 35 60	4 500 4 500 300	 180			
Mark allocation				***2***	***2***	***2***	***2***	***1***	**[9]**		

[9]

TOTAL: 100

Copyright reserved