higher education & training

Department:
Higher Education and Training
REPUBLIC OF SOUTH AFRICA

MARKING GUIDELINE

NATIONAL CERTIFICATE

RADIO AND TELEVISION THEORY N3

28 November 2024

This marking guideline consists of 5 pages.

Copyright reserved

SECTION A

QUESTION 1

1.1 A
1.2 D
1.3 C
1.4 D
1.5 B

(5 × 1) **[5]**

QUESTION 2

2.1 True
2.2 True
2.3 True
2.4 True
2.5 False

(5 × 1) **[5]**

QUESTION 3

3.1 K
3.2 F
3.3 H
3.4 G
3.5 I
3.6 E
3.7 D
3.8 C
3.9 A
3.10 B

(10 × 1) **[10]**

TOTAL SECTION A: 20

Copyright reserved

SECTION B

QUESTION 4

4.1

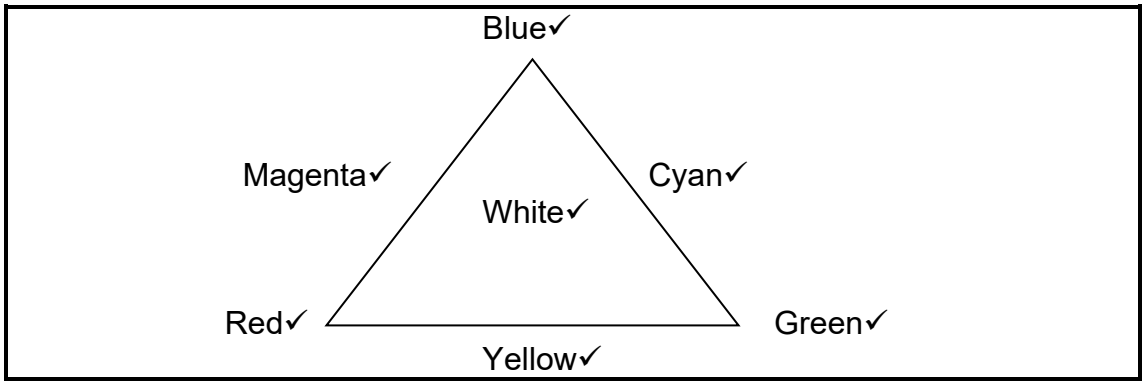

(7)

4.2 4.2.1 0.3 V + 0.11 V = 0.41 V✓ = Magenta✓
4.2.2 0.11 V + 0.59 V = 0.7 V✓ = Cyan✓
4.2.3 0.3 V + 0.59 V = 0.89 V✓ = Yellow✓

(3 × 2) (6)
[13]

QUESTION 5

- Signal generator ✓ is used to generate audio frequencies as well as radio frequencies. ✓
- Oscilloscope✓ displays waveforms, measures DC and AC voltages and the freguency range.✓
- Sweep generator✓ is an RF generator that can sweep over several freguencies and is used for alignment of the RF and IF stages.✓
- Colour bar generator✓ is used for colour checks or adjustments.✓
- Crosshatch generator✓ gives a signal used for convergence, pincushion and linearity adjustments.✓
- Degaussing coil✓ is used to demagnetise the screen of unwanted magnetic fields.✓
- EHT probe✓ is used for checking extra high tension voltages.✓
- Multimeter✓ is used for measuring voltage, current and resistance.✓
- Pattern bar generator provides a 1 kHz sound output for audio circuit repairs.

(Any 8 × 2) **[16]**

QUESTION 6

- Ensure that the final anode lug is facing the top of the cabinet.
- Place the tube into its position, making sure that the tube is centralised.
- Lightly tighten the retaining screws in place to hold the tube in its position.
- Replace the earth springs, magnetic shield and support straps and then tighten the nuts.
- Replace the tube neck assembly making sure that the components are lined up correctly.
- Turn the cabinet over to its upright position and replace the chassis.
- Replace the tube base and connect the EHT lead, plugs and sockets in their correct positions.

- Degauss the tube and carry out the complete tuning procedure of that particular set. **[8]**

QUESTION 7

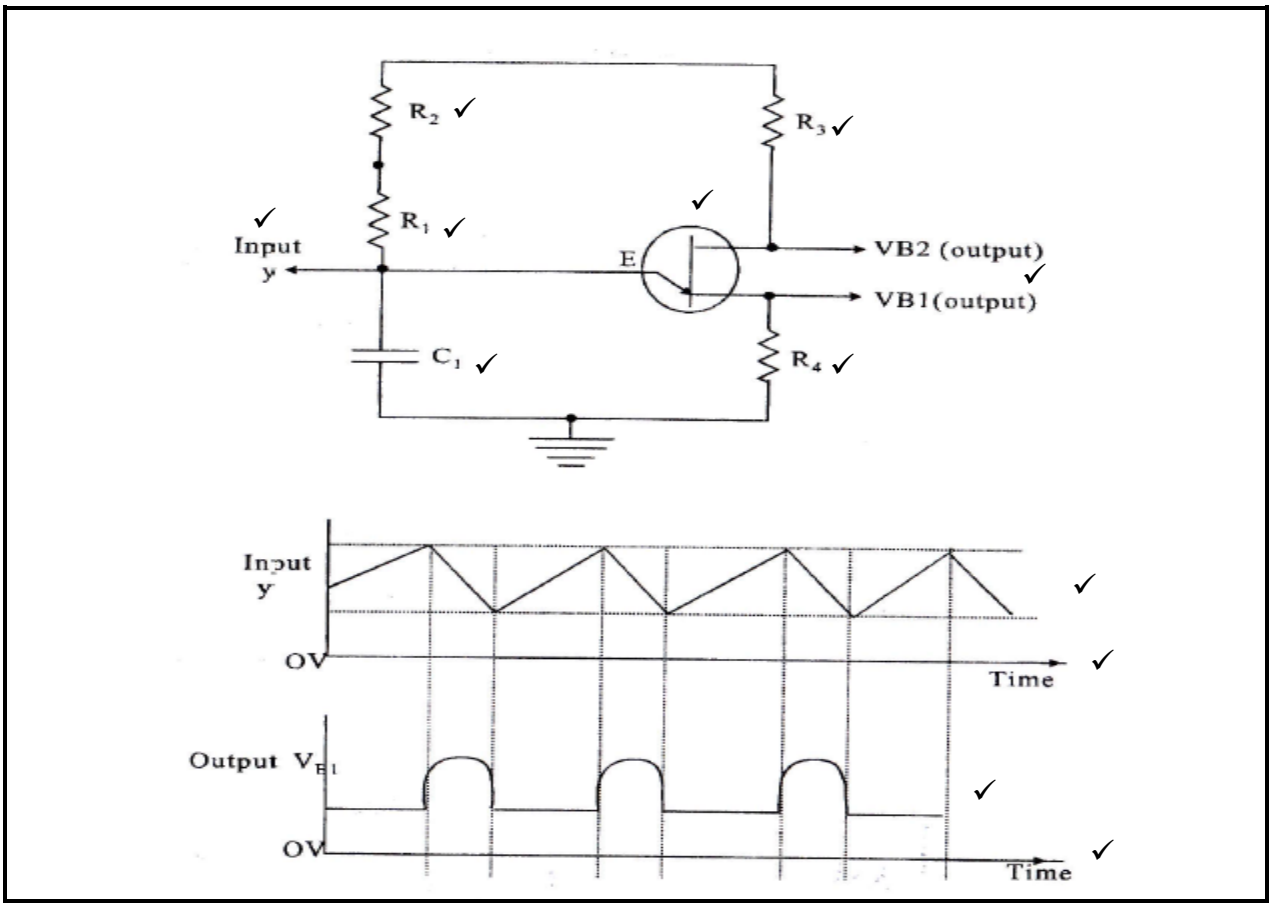

[12]

QUESTION 8

8.1 The tripler is a circuit which consists of capacitors and diodes that produce the extra high tension to drive the tube. ✓ In colour TV receivers it supplies ± 25 kV.✓

8.2 Purity adjustments ensure that the given colour beam can only strike its phosphor dots, or stripes over the entire screen.✓ ✓

8.3 Peak white is obtained when all three guns (red, green and blue) are driven to their maximum speed. ✓✓

8.4 Convergence means the three beams, red, green and blue must go to the same centre. ✓✓

8.5 This circuit provides synchronising pulses ✓ to the line and field oscillators.✓

(5 × 2) **[10]**

QUESTION 9

- Bandwidth. ✓ This refers to the frequencies that are between upper and lower points and that are accepted as being within the antenna bandwidth (0,707 of the maximum current or voltage).✓ All other frequencies above or below these points are considered as lying outside the reception pattern of that particular antenna.✓
- Beam width: ✓ This is the angle formed by the half-power (3 dB) on the polar diagram. It represents the beam width of the radiating pattern.✓ This term refers to the horizontal pattern of the signal (or azimuth) as received. ✓
- Gain of an antenna: ✓ This is the ratio of the power induced in the given antenna as compared to the power induced in a simple dipole by an electromagnetic wave by the same field strength.✓ This gain is expressed in decibel.✓

(3 × 3) **[9]**

QUESTION 10

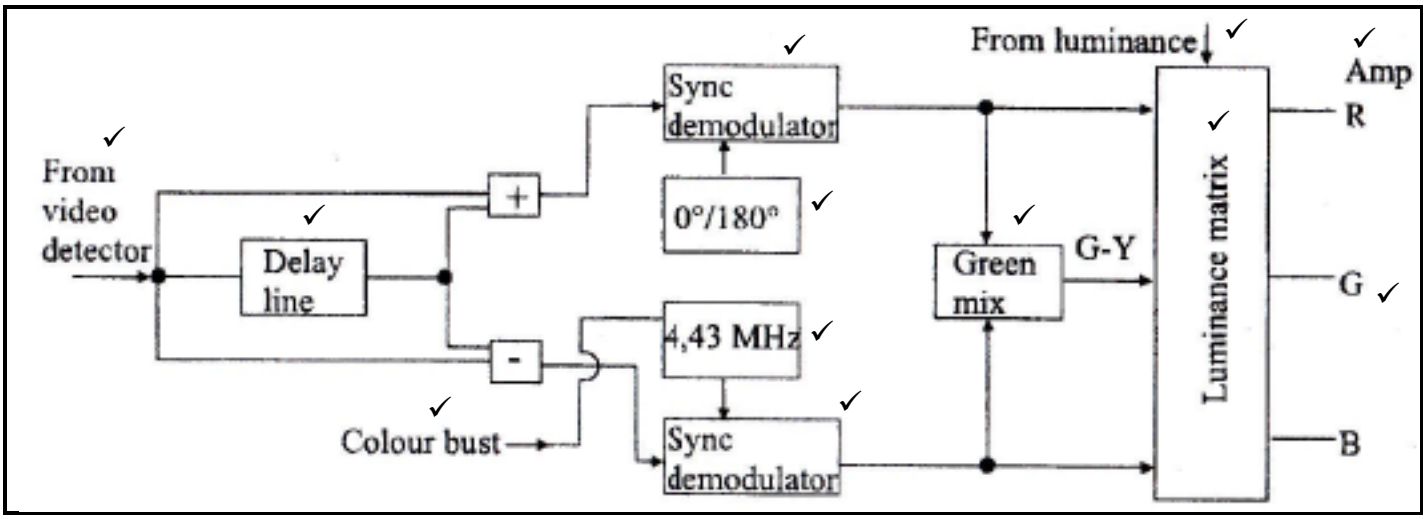

[12]

TOTAL SECTION B: 80
GRAND TOTAL: 100

Copyright reserved