higher education & training

Department:
Higher Education and Training
REPUBLIC OF SOUTH AFRICA

NASIENRIGLYN

NASIONALE SERTIFIKAAT

PLAATWERK- EN BOUSTAALTEKENE N3

20 November 2024

Hierdie nasienriglyn bestaan uit 7 bladsye.

Kopiereg voorbehou

VRAAG 1

BEREKENINGE

1. $X - X \,/\, X - 2 = \sqrt{12.5^2 + 51^2}$ ✓
$= 52{,}51\ mm$ ✓

2. $A - X \,/\, A - 2 = \sqrt{12{,}5^2 + 35^2 + 51^2}$ ✓ ✓ ✓
$= 63{,}11\ mm$ ✓

3. $A - 0 \,/\, A - 1 = \sqrt{(35 - 22{,}5Cos30)^2 + (35 - 22{,}5Sin30)^2 + 51^2}$ ✓ ✓ ✓
$= 58{,}35\ mm$ ✓

4. $\mathrm{X} - 0 = (3{,}142\ \mathrm{X}\ 45) \div 12$
$= 11{,}78\ mm$ ✓

VRAAG 1

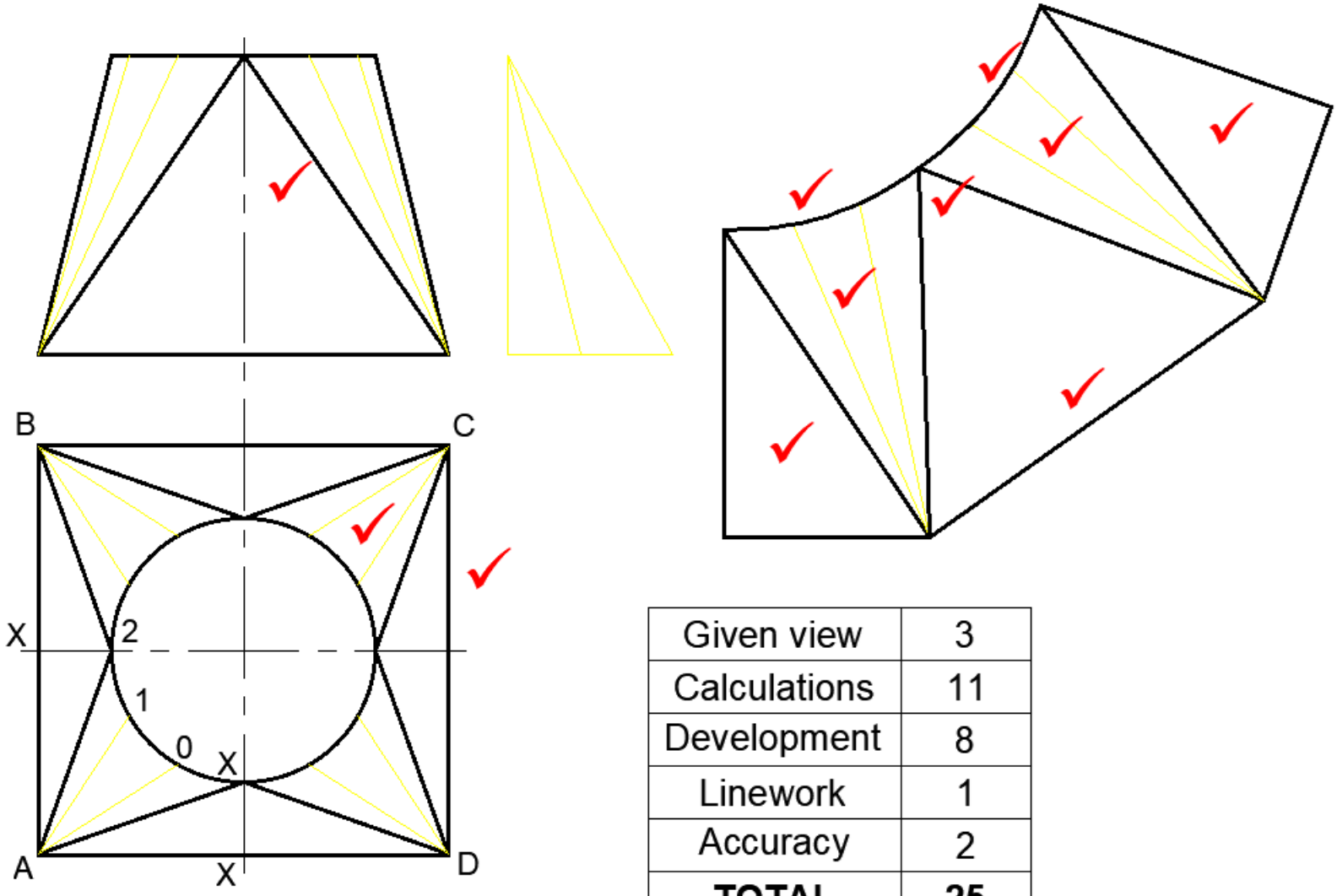

Given view	3
Calculations	11
Development	8
Linework	1
Accuracy	2
TOTAL	**25**

VRAAG 2

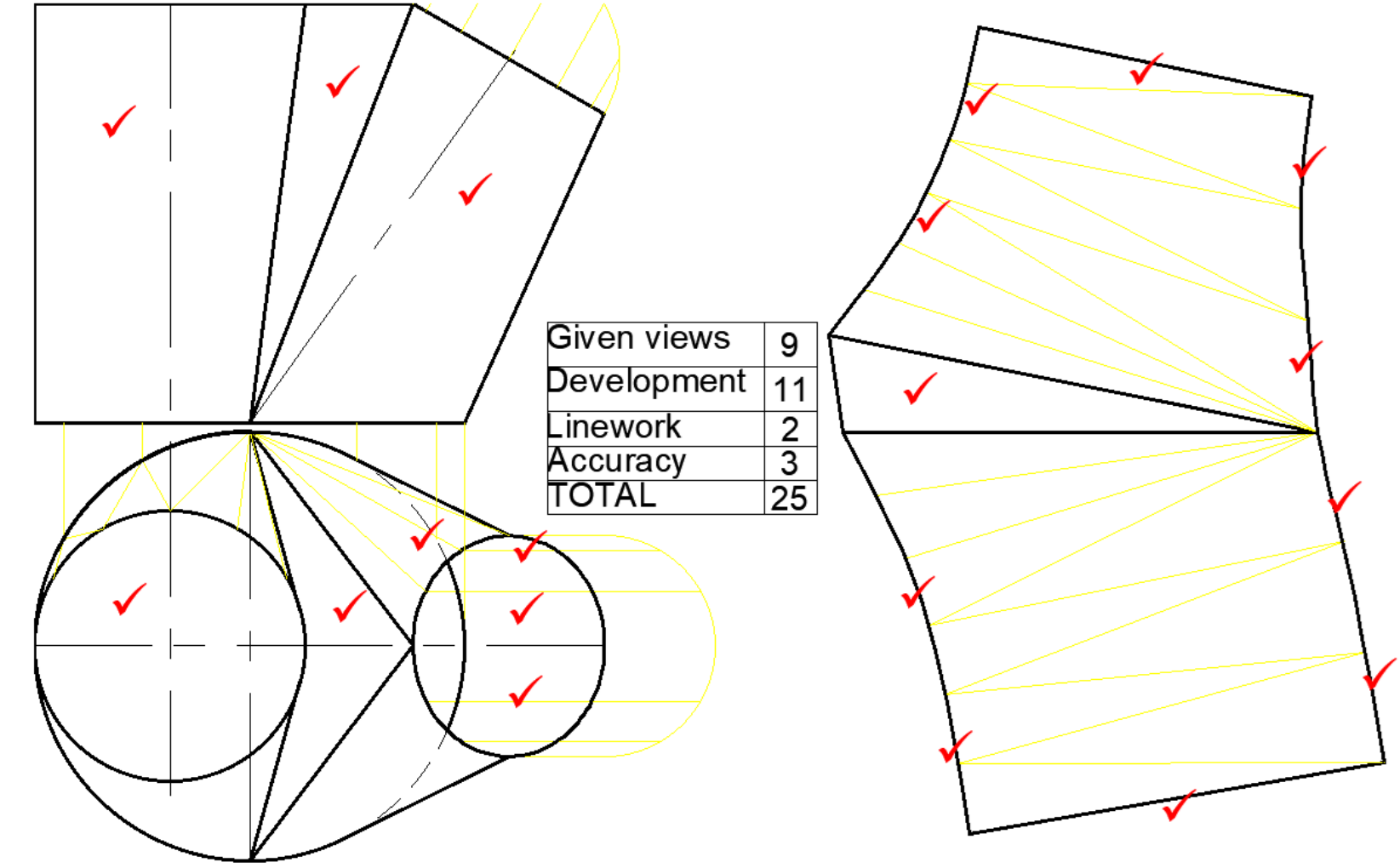

Given views	9
Development	11
Linework	2
Accuracy	3
TOTAL	25

VRAAG 3

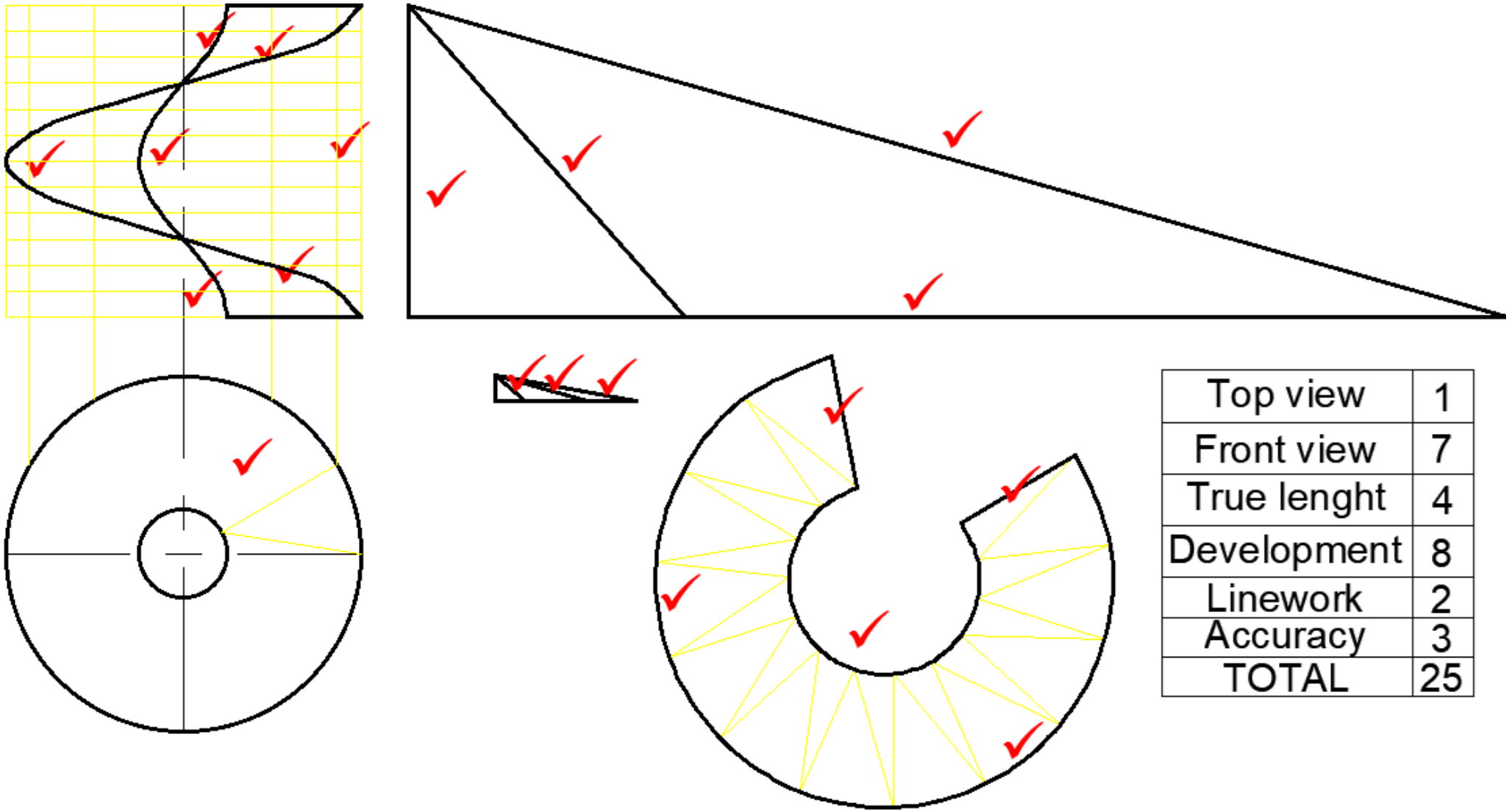

Top view	1
Front view	7
True lenght	4
Development	8
Linework	2
Accuracy	3
TOTAL	25

VRAAG 4

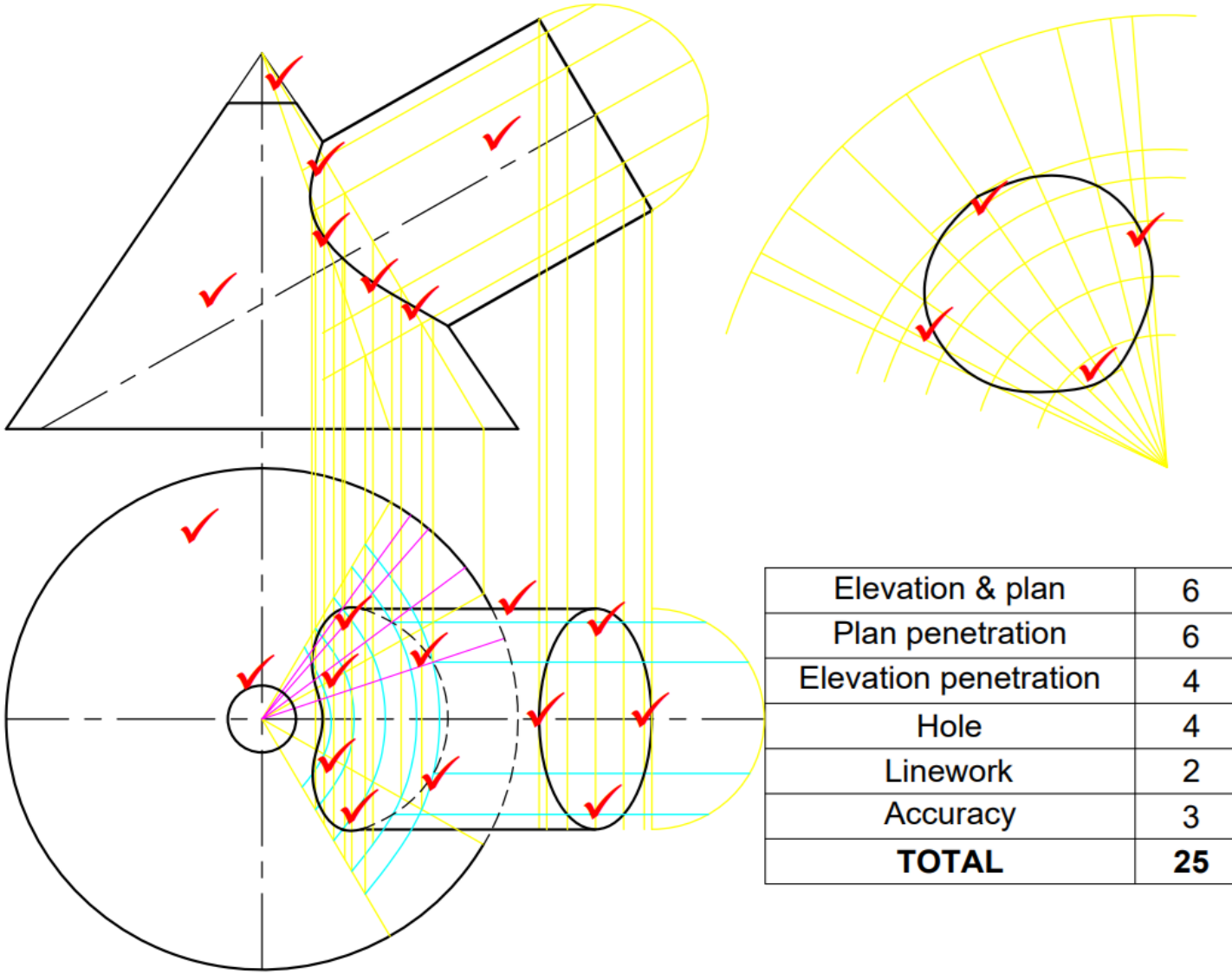

Elevation & plan	6
Plan penetration	6
Elevation penetration	4
Hole	4
Linework	2
Accuracy	3
TOTAL	**25**

VRAAG 5

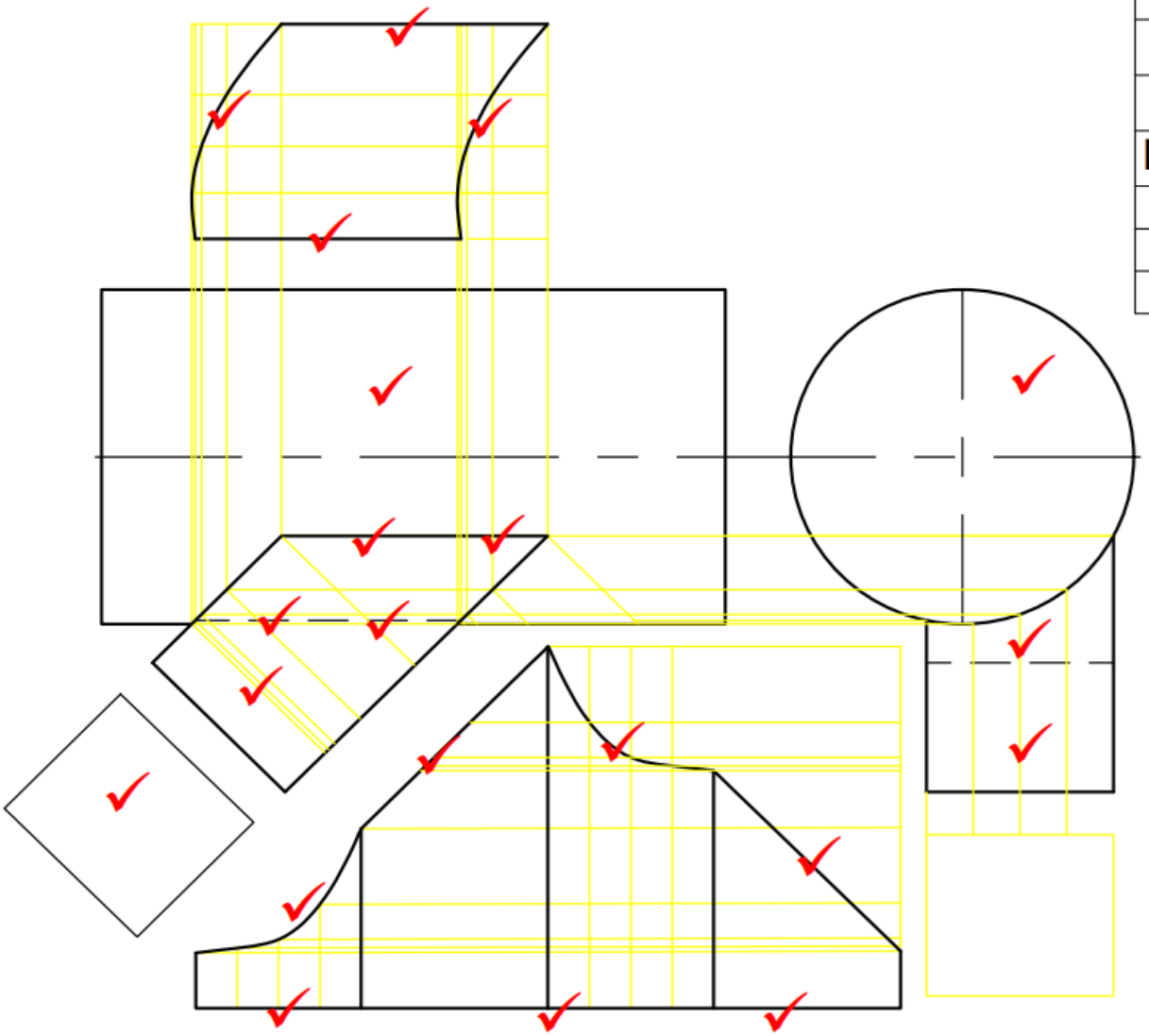

Given views	6
Penetration	4
Hole	4
Development	7
Linework	2
Accuracy	2
TOTAL	25

Kopiereg voorbehou