higher education & training

Department:
Higher Education and Training
REPUBLIC OF SOUTH AFRICA

MARKING GUIDELINE

NATIONAL CERTIFICATE:
MULTI-DISCIPLINARY DRAWING OFFICE PRACTICE

PICTORIAL DRAUGHTING N4

27 November 2024

This marking guideline consists of 7 pages.

Copyright reserved

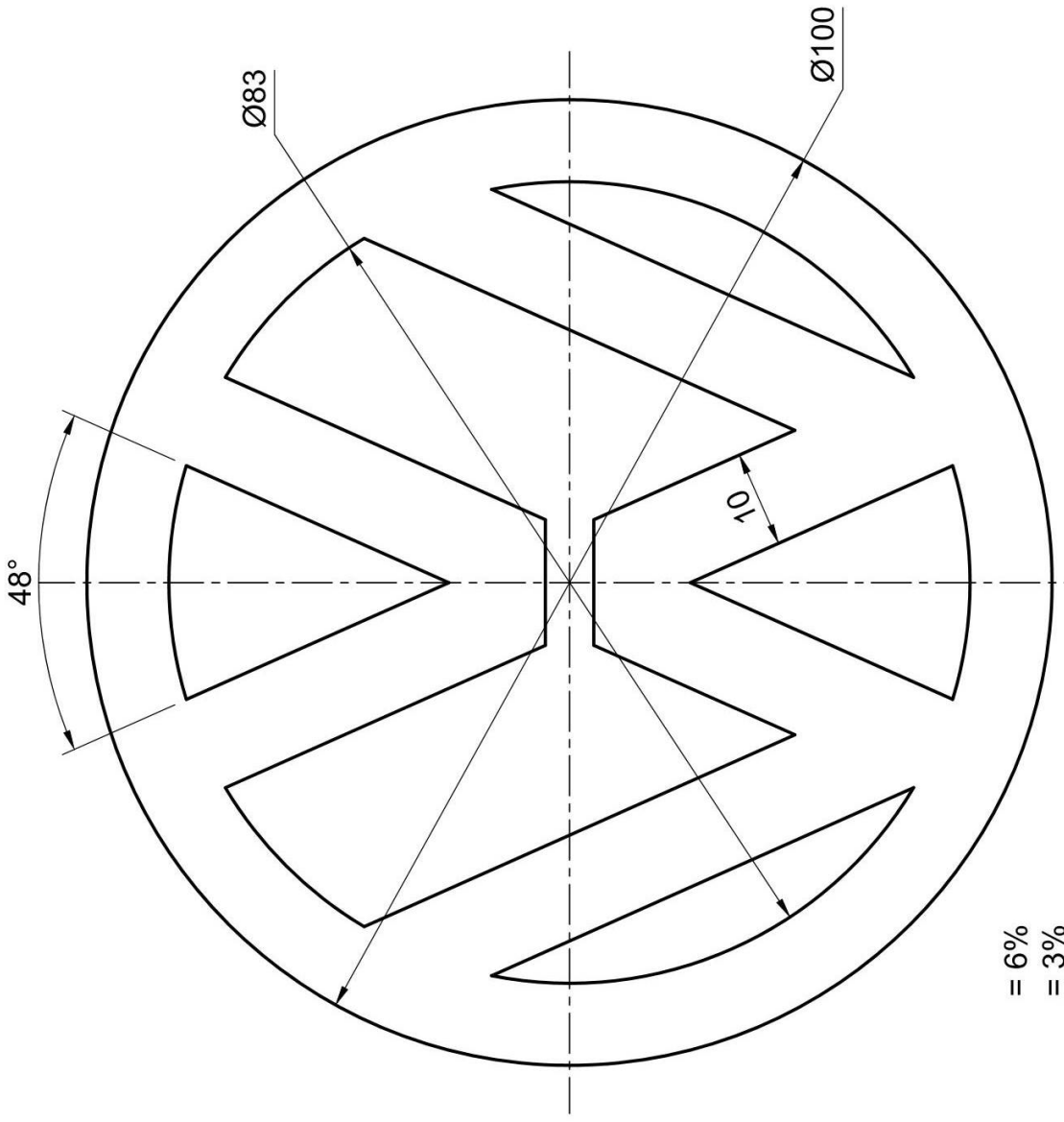

VW EMBLEM
SCALE 1,5:1

PROPORTION	= 6%
LINEWORK	= 3%
ACCURACY	= 2%
BALANCE LAYOUT/NEATNESS	= 1%
DIMS & TITLE & SCALE	= 2%
TOTAL	= 14%

Copyright reserved

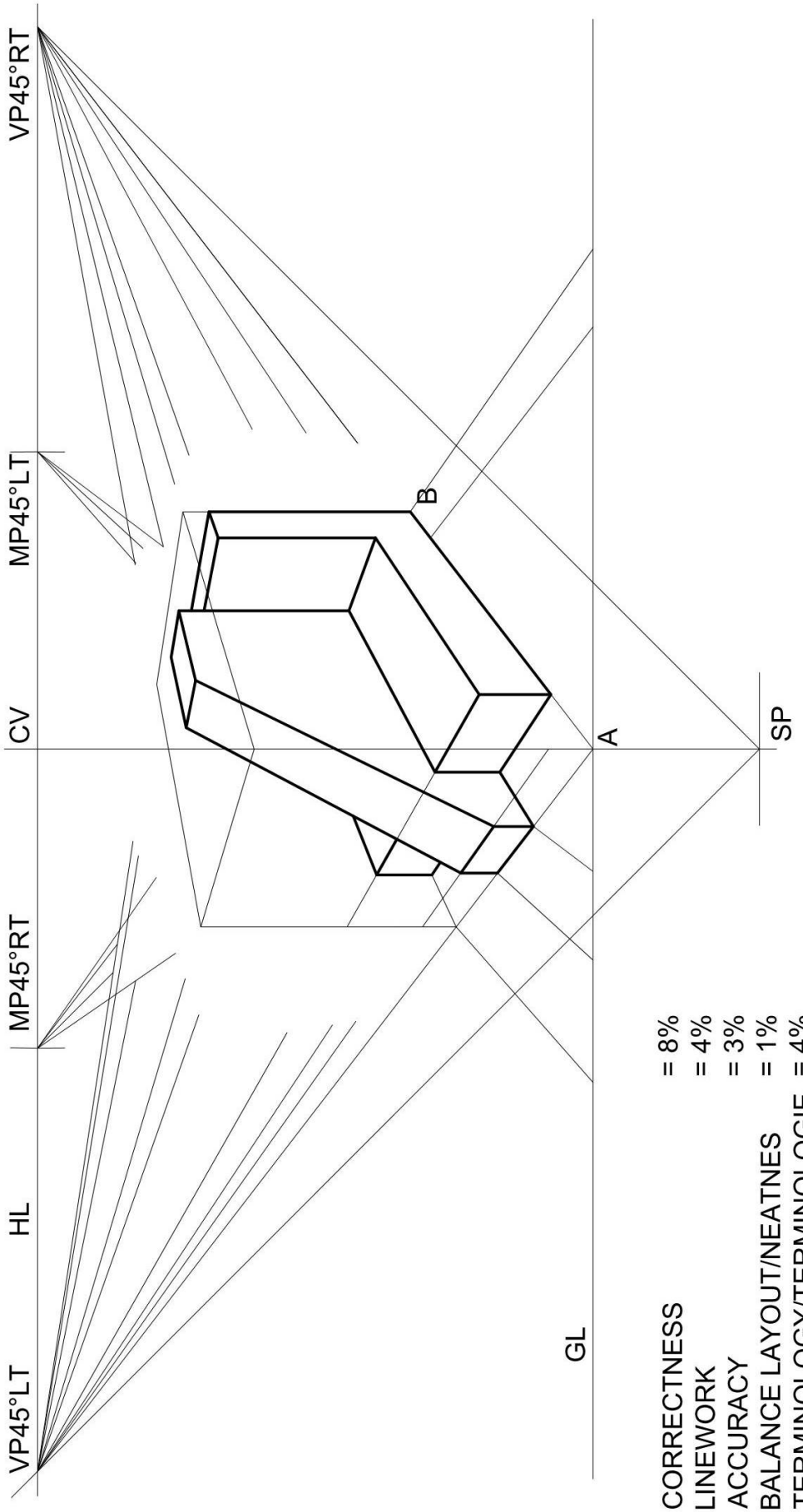

Copyright reserved

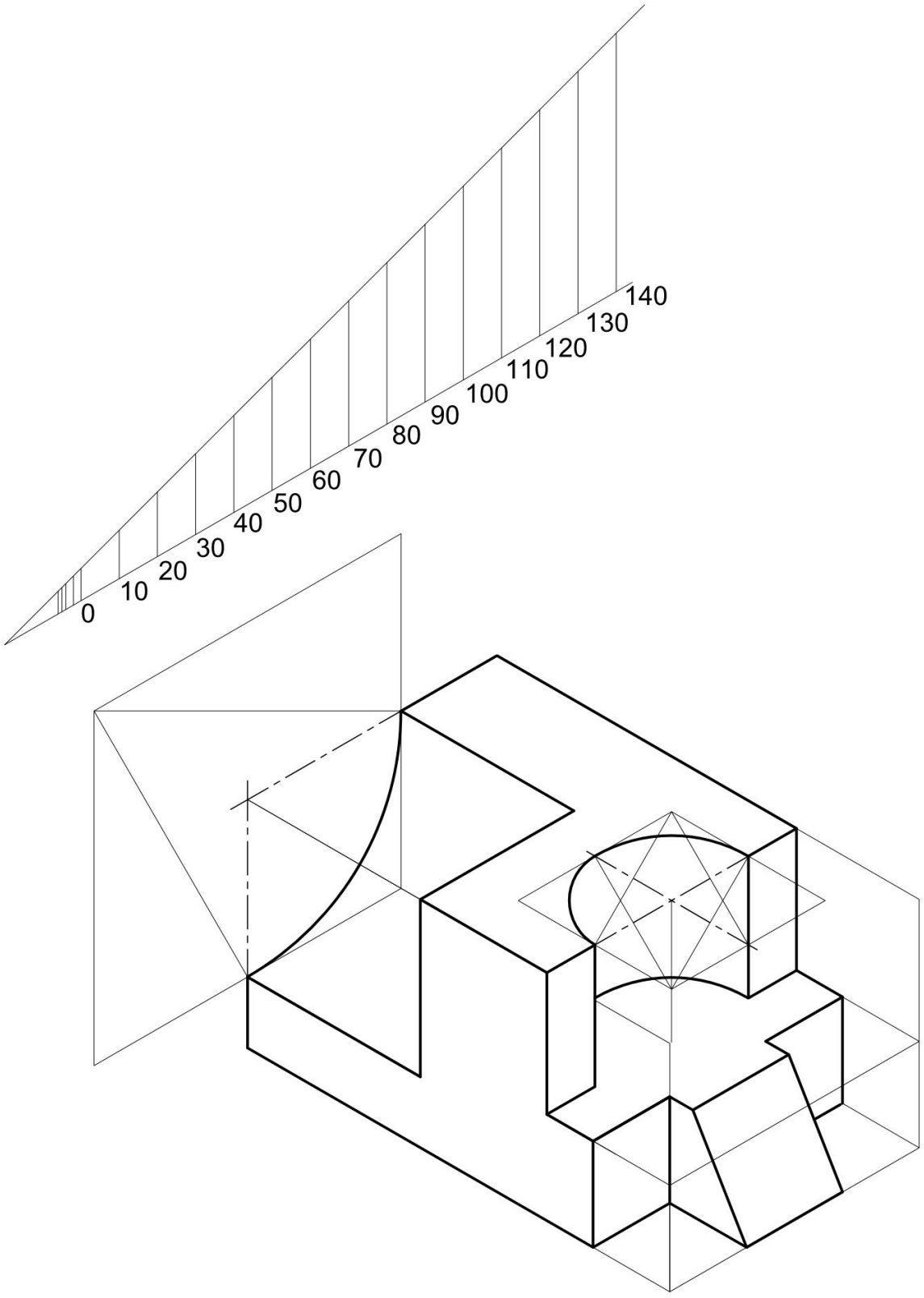

CORRECTNESS	= 9%
LINEWORK	= 4%
ACCURACY	= 3%
BALANCE LAYOUT/NEATNESS	= 2%
ISOMETRIC SCALE	= 2%
TOTAL	= 20%

Copyright reserved

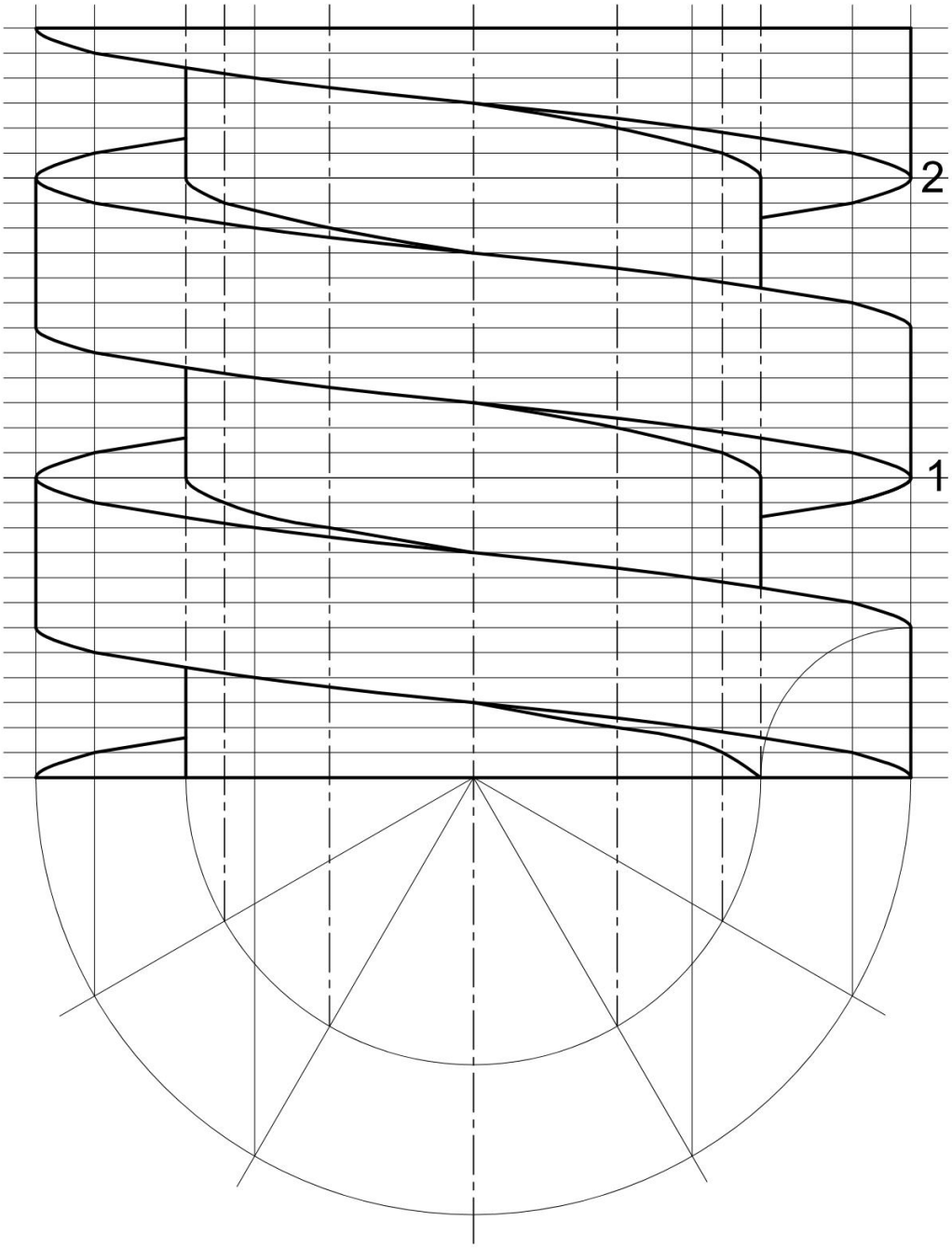

CORRECTNESS	= 7%
LINEWORK	= 4%
ACCURACY	= 2%
BALANCE LAYOUT/NEATNESS	= 1%
TOTAL	= 14%

Copyright reserved

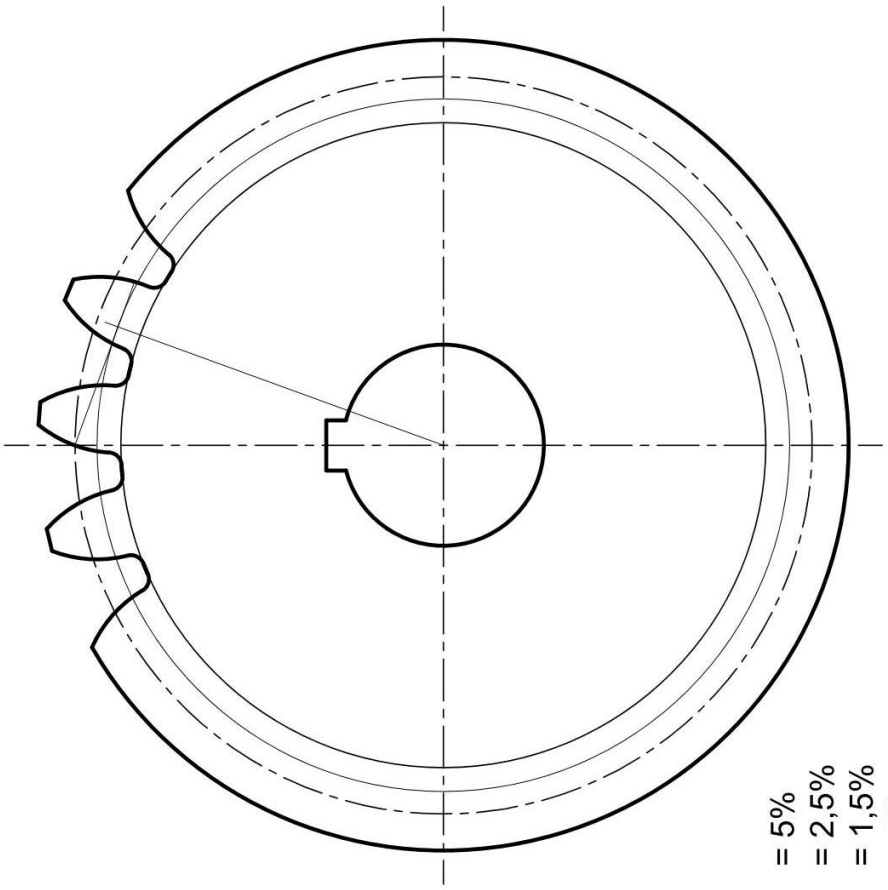

MOD = P.C.D./20
= 110/20
= 5,5

C.P. = 3,142 X M
= 3,142 X 5,5
= 17,281

TT = 17,281/2
= 8,64

CORRECTNESS	= 5%
LINEWORK	= 2,5%
ACCURACY	= 1,5%
BALANCE LAYOUT/NEATNESS	= 1%
CONSTR.& CALC.	= 4%
TOTAL	= 14%

Copyright reserved

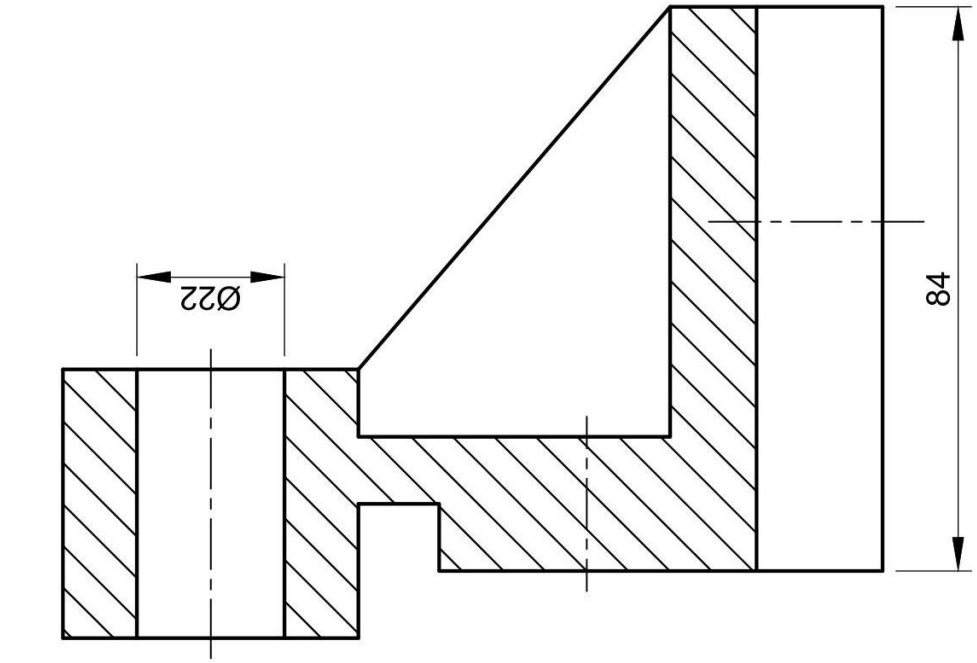

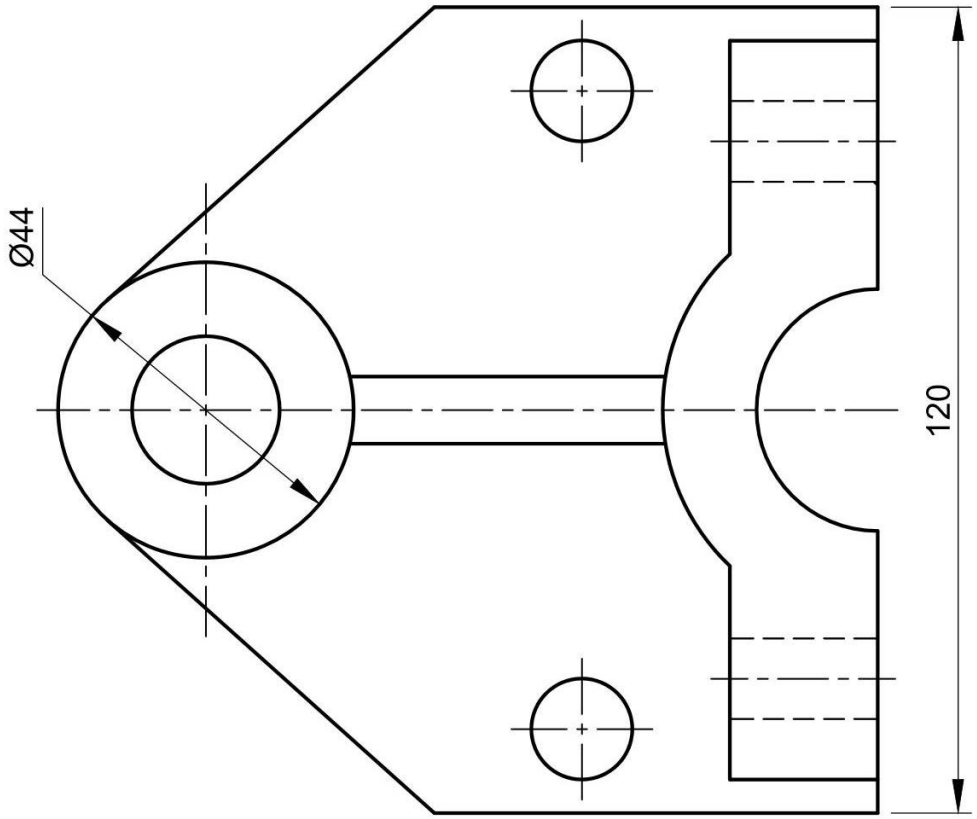

CORRECTNESS = 10%
LINEWORK = 3%
ACCURACY = 2%
BALANCED LAYOUT & NEATNESS = 1%
DIMENSIONS = 2%
TOTAL = 18%

Copyright reserved