higher education & training

Department:
Higher Education and Training
REPUBLIC OF SOUTH AFRICA

MARKING GUIDELINE

NATIONAL CERTIFICATE

MECHANICAL DRAUGHTING N4

18 November 2024

This marking guideline consists of 7 pages.

Copyright reserved

QUESTION 1

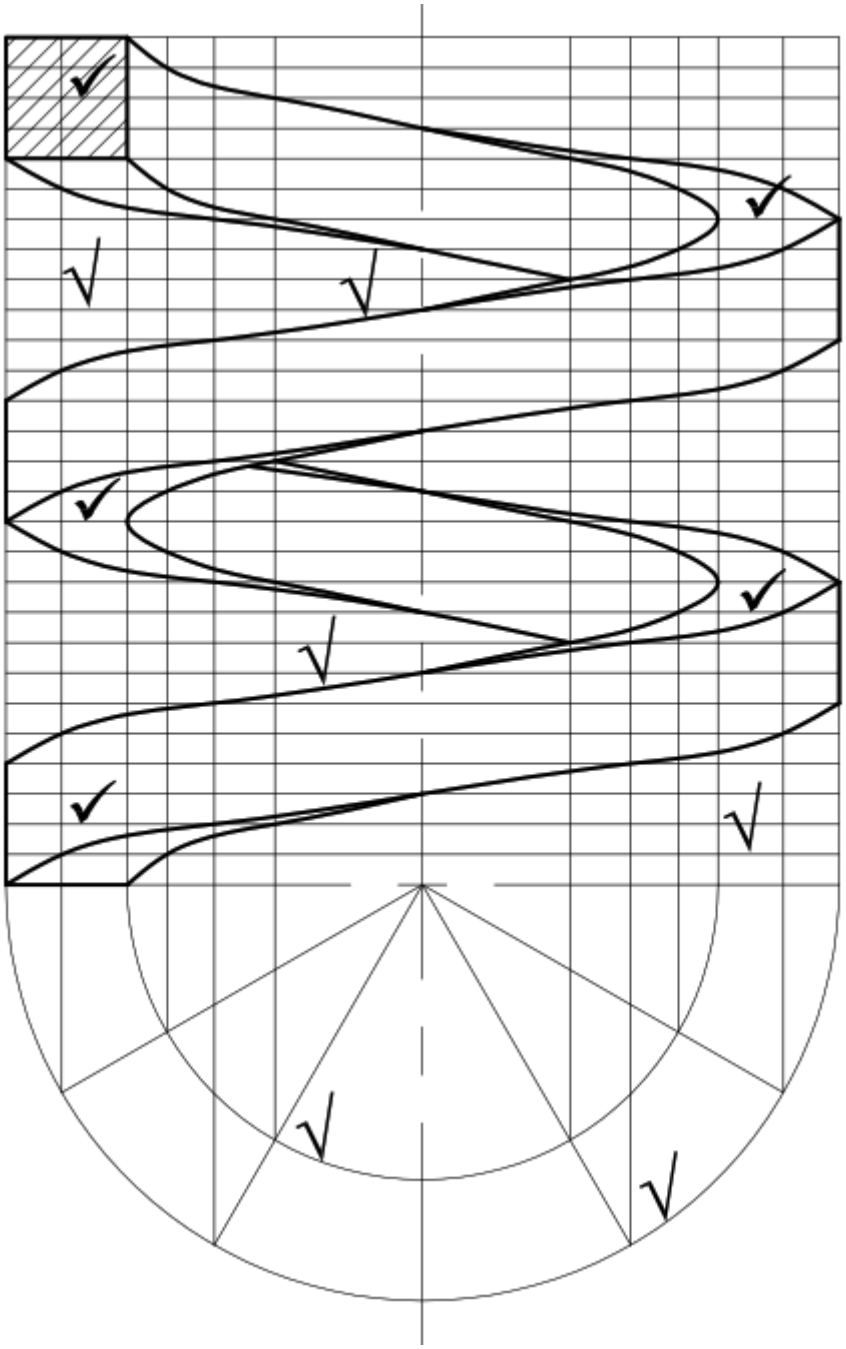

MARK ALLOCATION	
Correctness	8
Linework	2
Accuracy	2

[12]

QUESTION 2

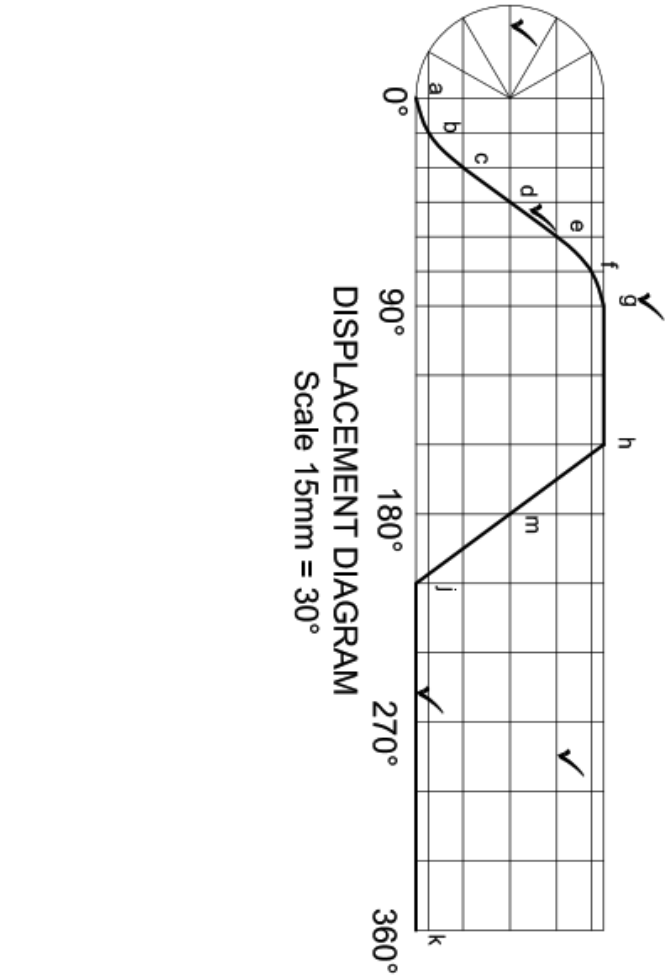

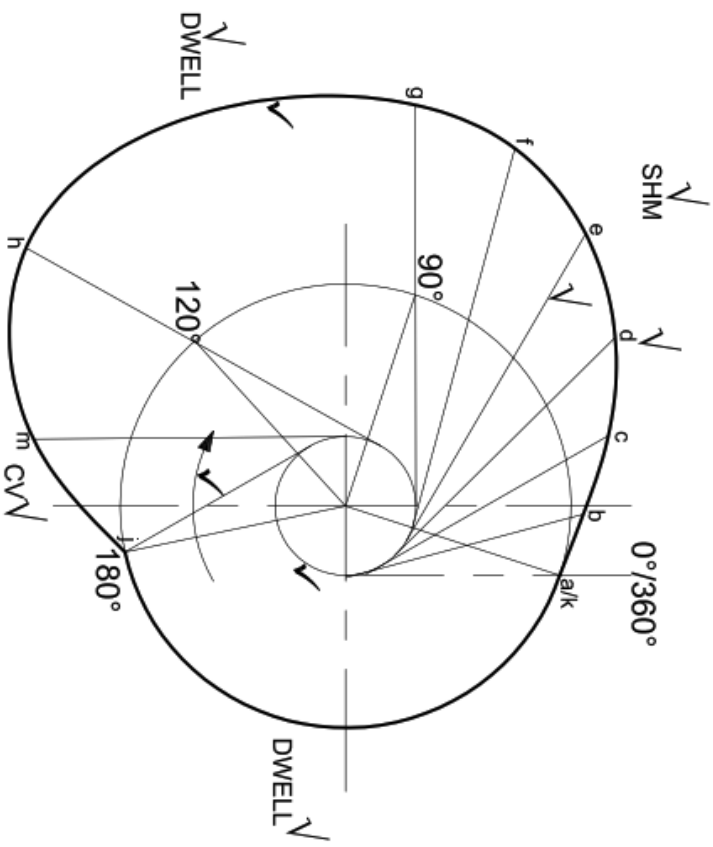

MARK ALLOCATION		
	DISPLACEMENT DIAGRAM	CAM PROFILE
Correctness	5	6
Line work	1	1
Accuracy	1	1

[15]

QUESTION 3

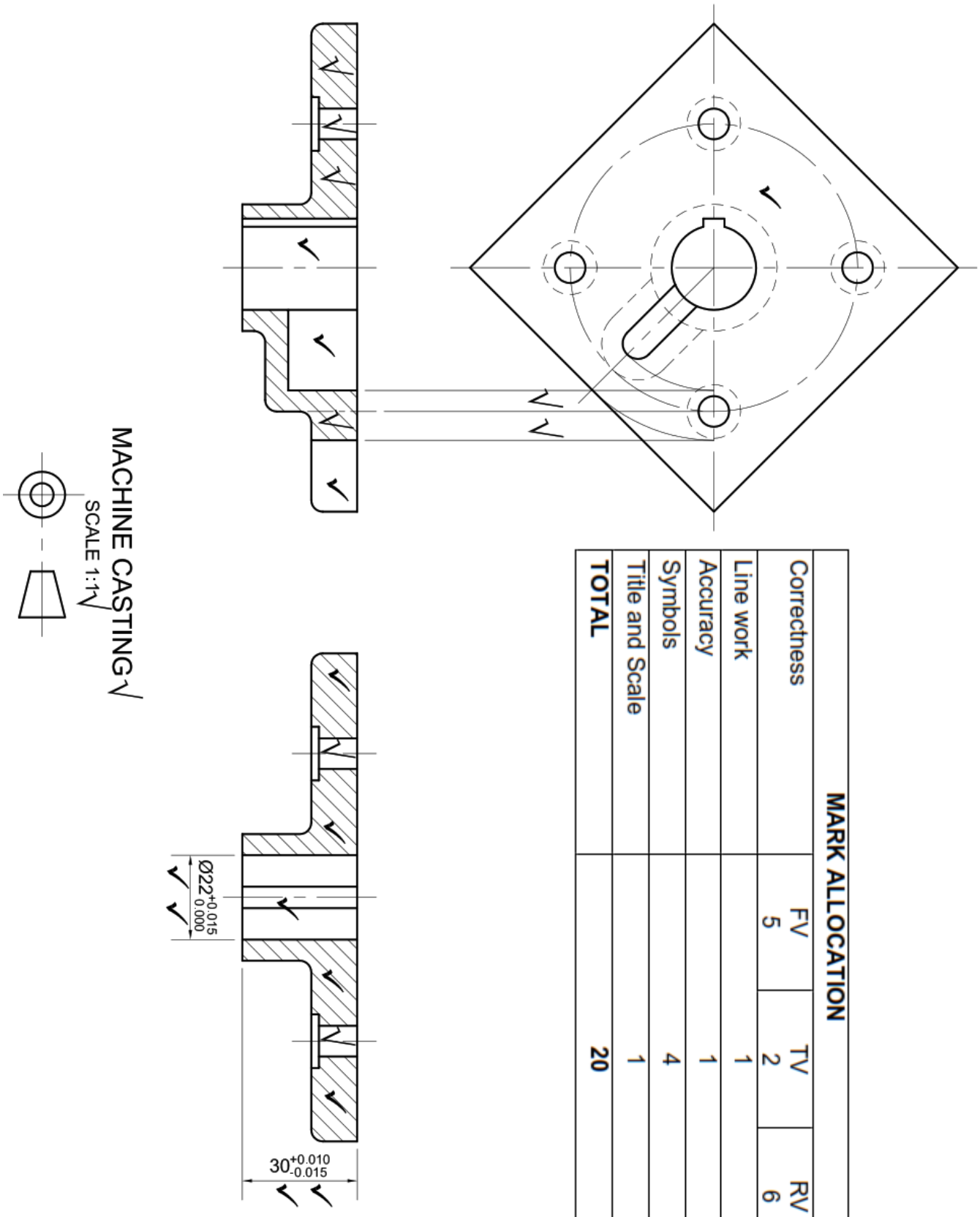

MARK ALLOCATION			
	FV	TV	RV
Correctness	5		
Line work		1	
Accuracy		1	
Symbols		4	
Title and Scale		1	
TOTAL		**20**	

[20]

QUESTION 4

4.1

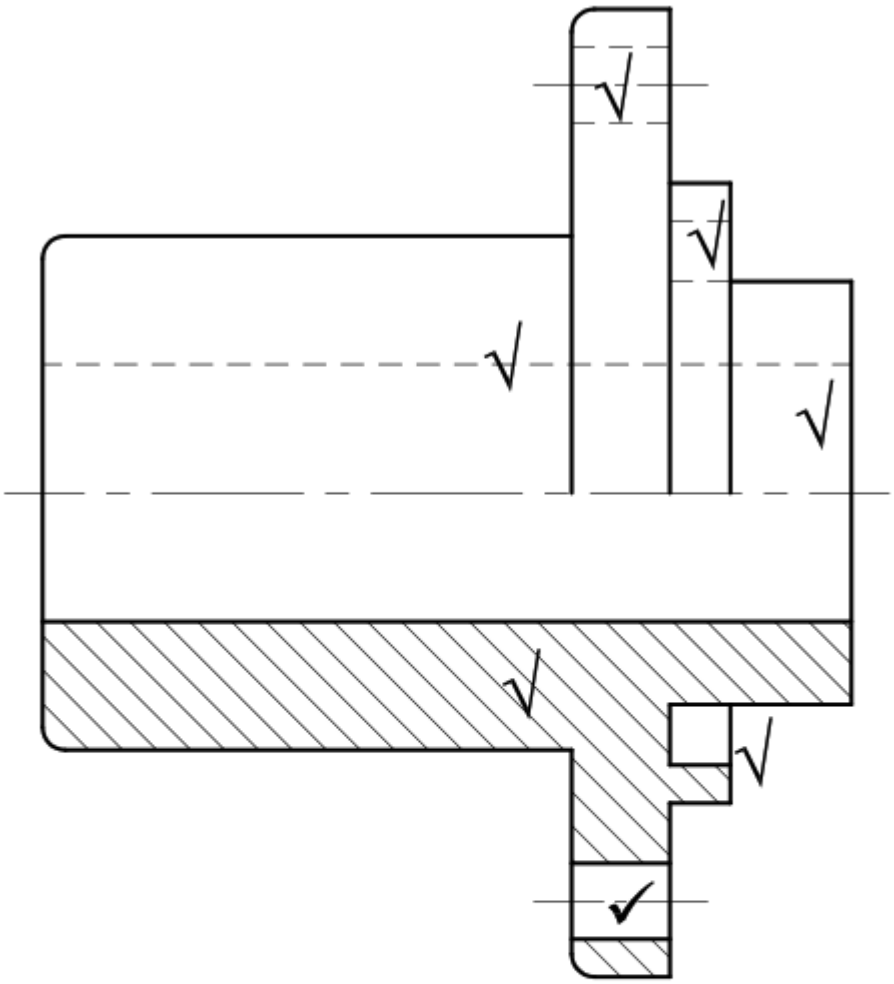

BODY (ITEM 1)

SCALE 1:1

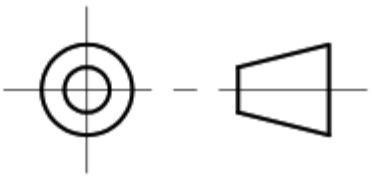

MARK ALLOCATION	
Correctness	4
Linework	2
Accuracy	1
TOTAL	**7**

4.2

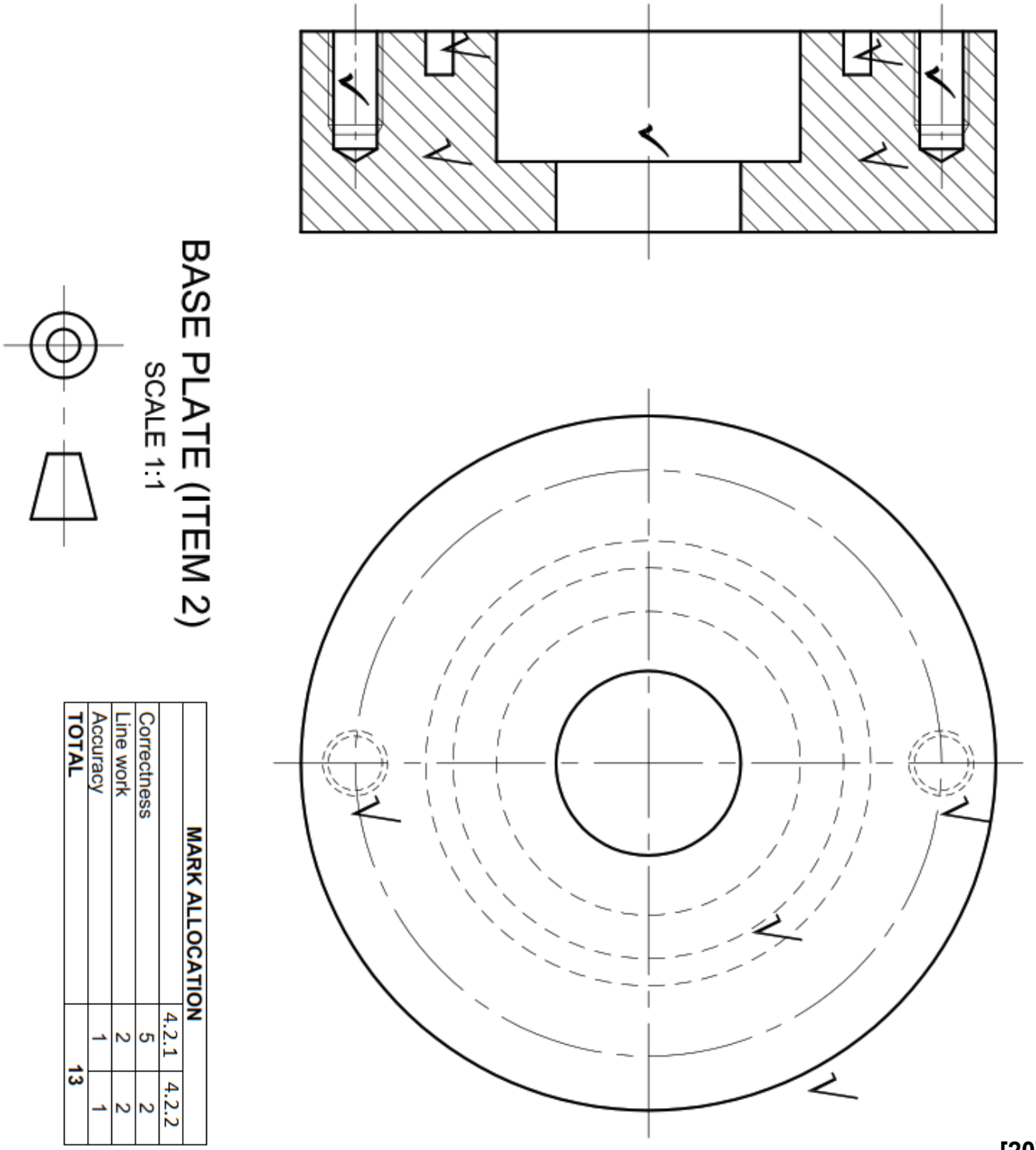

	MARK ALLOCATION	
	4.2.1	4.2.2
Correctness	5	2
Line work	2	2
Accuracy	1	1
TOTAL	**13**	

[20]

QUESTION 5

ITEM	NAME	QTY	MATERIAL	REMARKS
ITEM 1	BODY	1 OFF	MILD STEEL	
ITEM 2	PULLEY	1 OFF	MILD STEEL	
ITEM 3	BOLT	1 OFF	MILD STEEL	
ITEM 4	PIN	1 OFF	MILD STEEL	

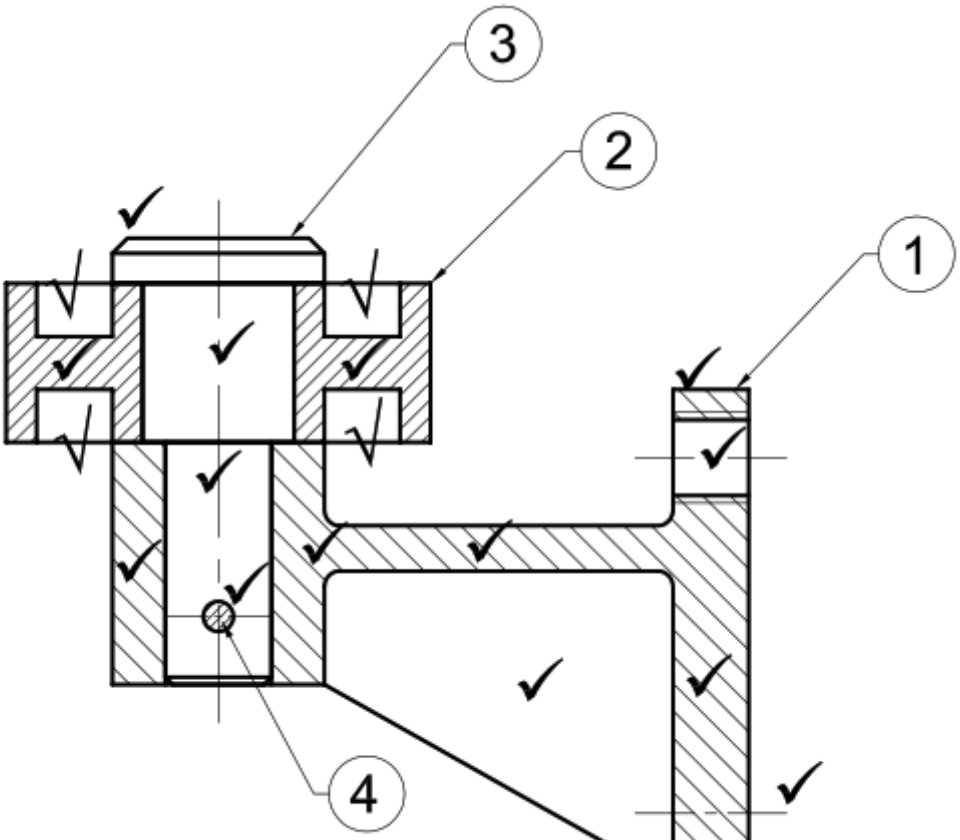

SLIDE DOOR GUIDE✓

SCALE 1:1✓

MARK ALLOCATION	
Correctness	16
Item numbers	4
Line work	3
Accuracy	2
Part list	3
Title and Scale	2

[30]

Balanced layout and neatness of the complete answer sheet. **[3]**

TOTAL: 100

Copyright reserved