higher education & training

Department:
Higher Education and Training
REPUBLIC OF SOUTH AFRICA

NASIENRIGLYN

NASIONALE SERTIFIKAAT

PRENTTEKENWERK

29 November 2023

Hierdie nasienriglyn bestaan uit 8 bladsye.

Kopiereg voorbehou

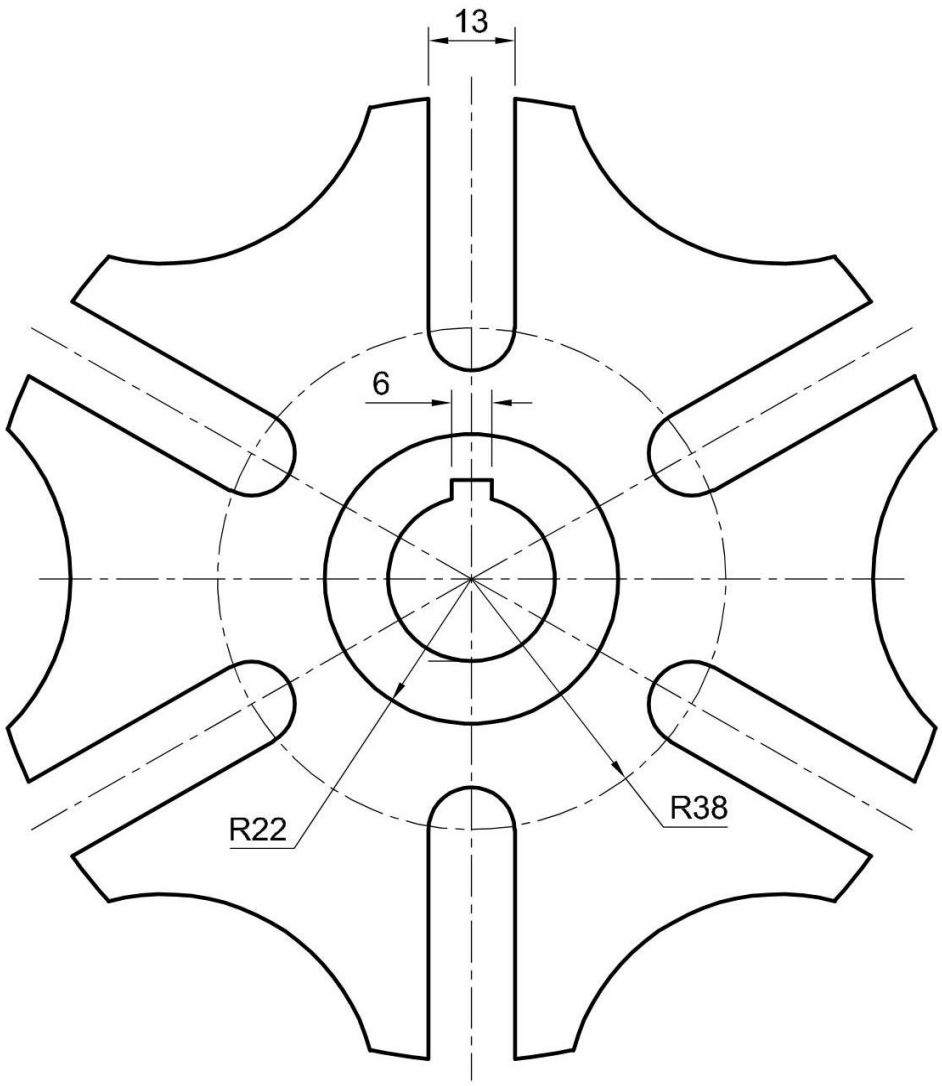

GUIDE PLATE

SCALE 1:1

PROPORTION	= 6%
LINEWORK	= 3%
ACCURACY	= 2%
BALANCE LAYOUT/NEATNESS	= 1%
DIMS & TITLE & SCALE	= 2%
TOTAL	= 14%

Copyright reserved

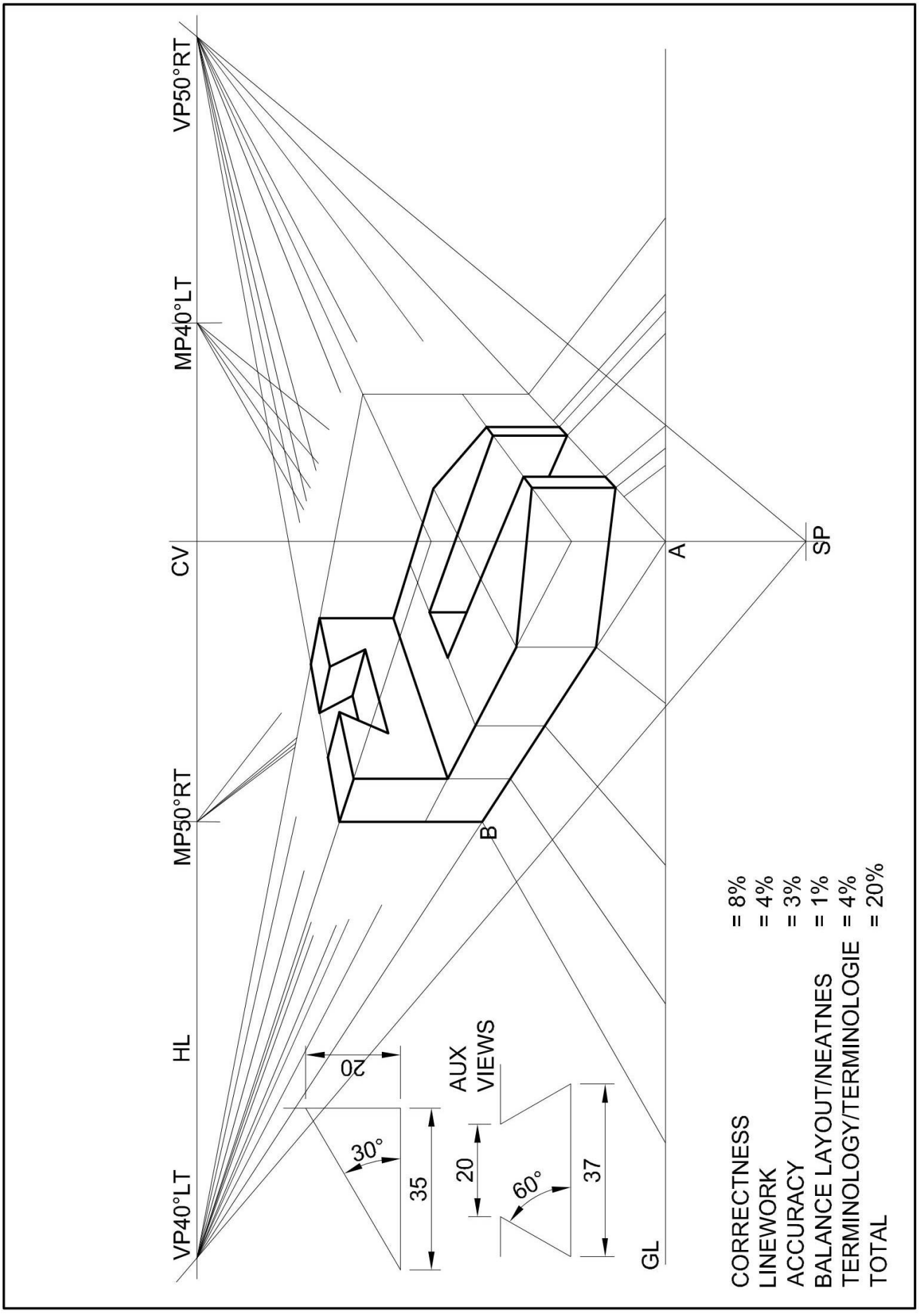

Copyright reserved

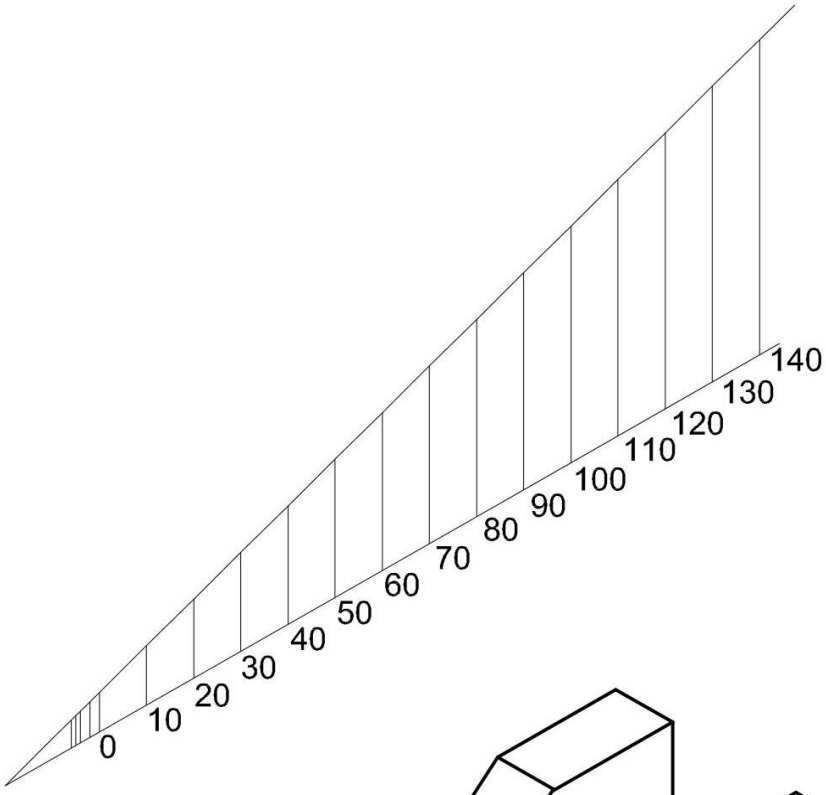

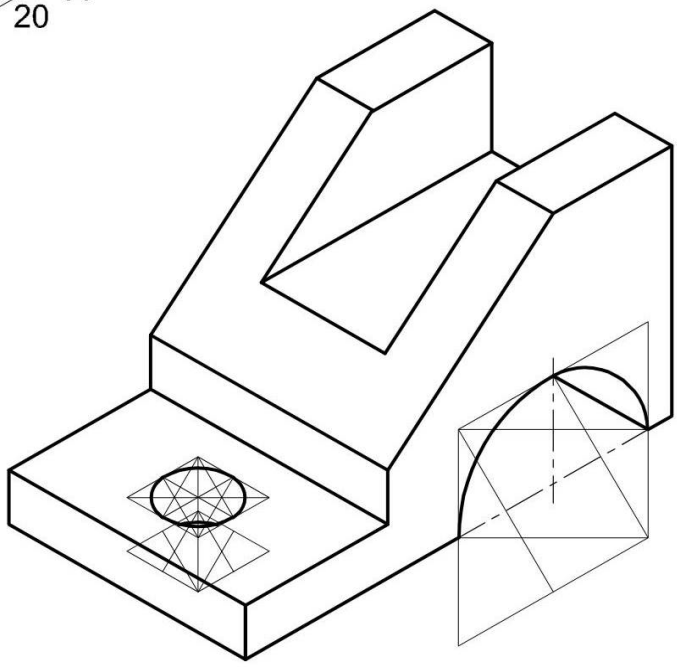

CORRECTNESS	= 9%
LINEWORK	= 4%
ACCURACY	= 3%
BALANCE LAYOUT/NEATNESS	= 2%
ISOMETRIC SCALE	= 2%
TOTAL	= 20%

Copyright reserved

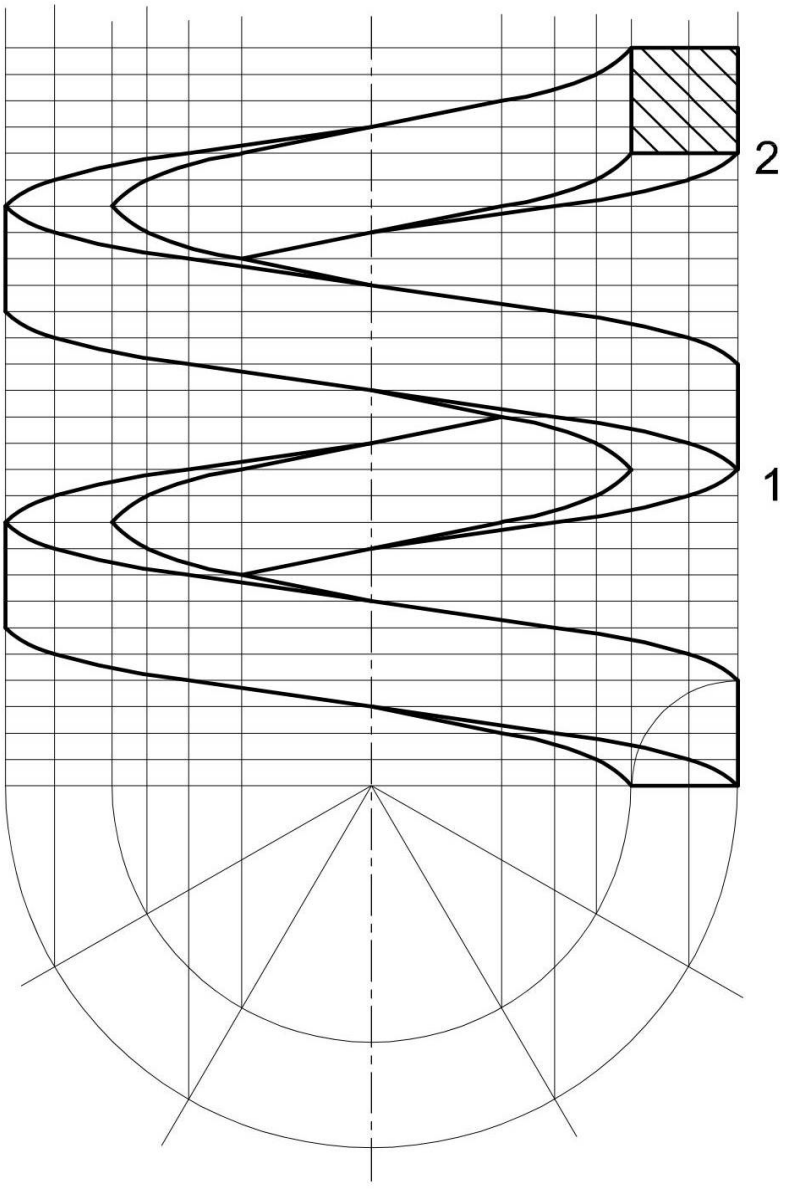

CORRECTNESS	= 7%
LINEWORK	= 4%
ACCURACY	= 2%
BALANCE LAYOUT/NEATNESS	= 1%
TOTAL	= 14%

Kopiereg voorbehou

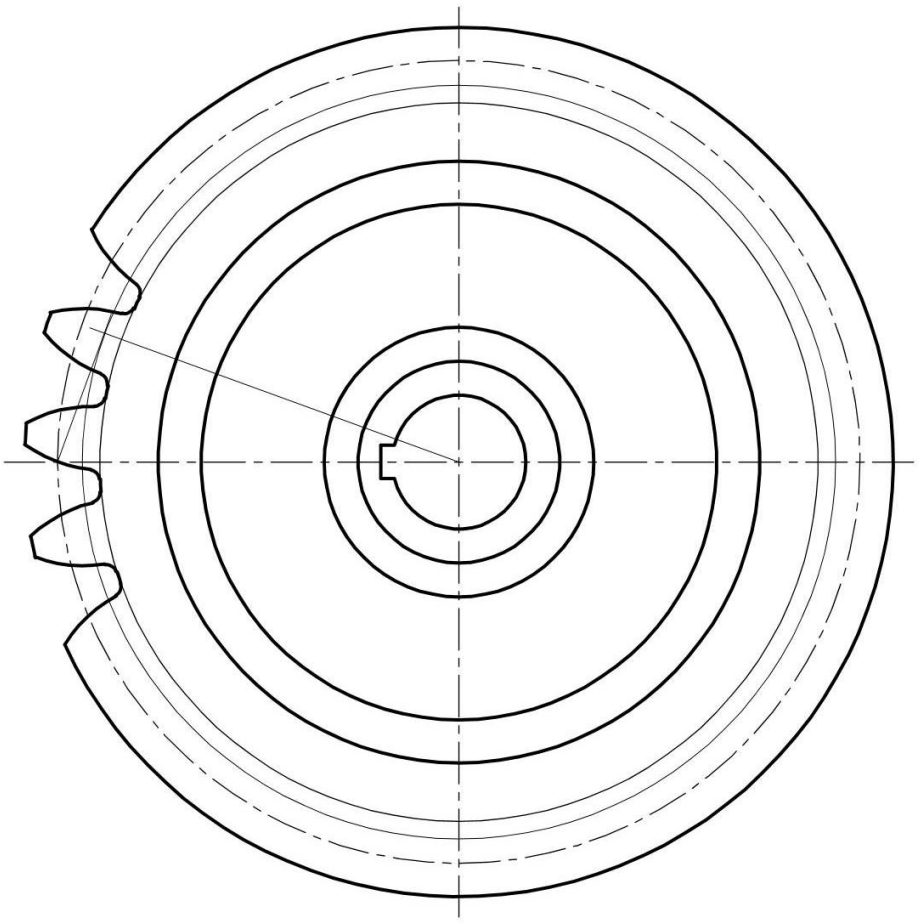

MOD = P.C.D./24
= 120/24
= 5

C.P. = 3,142 X M
= 3,142 X 5
= 15.71

TT = 15.71/2
= 7.855

CORRECTNESS	= 5%
LINEWORK	= 2,5%
ACCURACY	= 1,5%
BALANCE LAYOUT/NEATNESS	= 1%
CONSTR.& CALC.	= 4%
TOTAL	= 14%

Copyright reserved

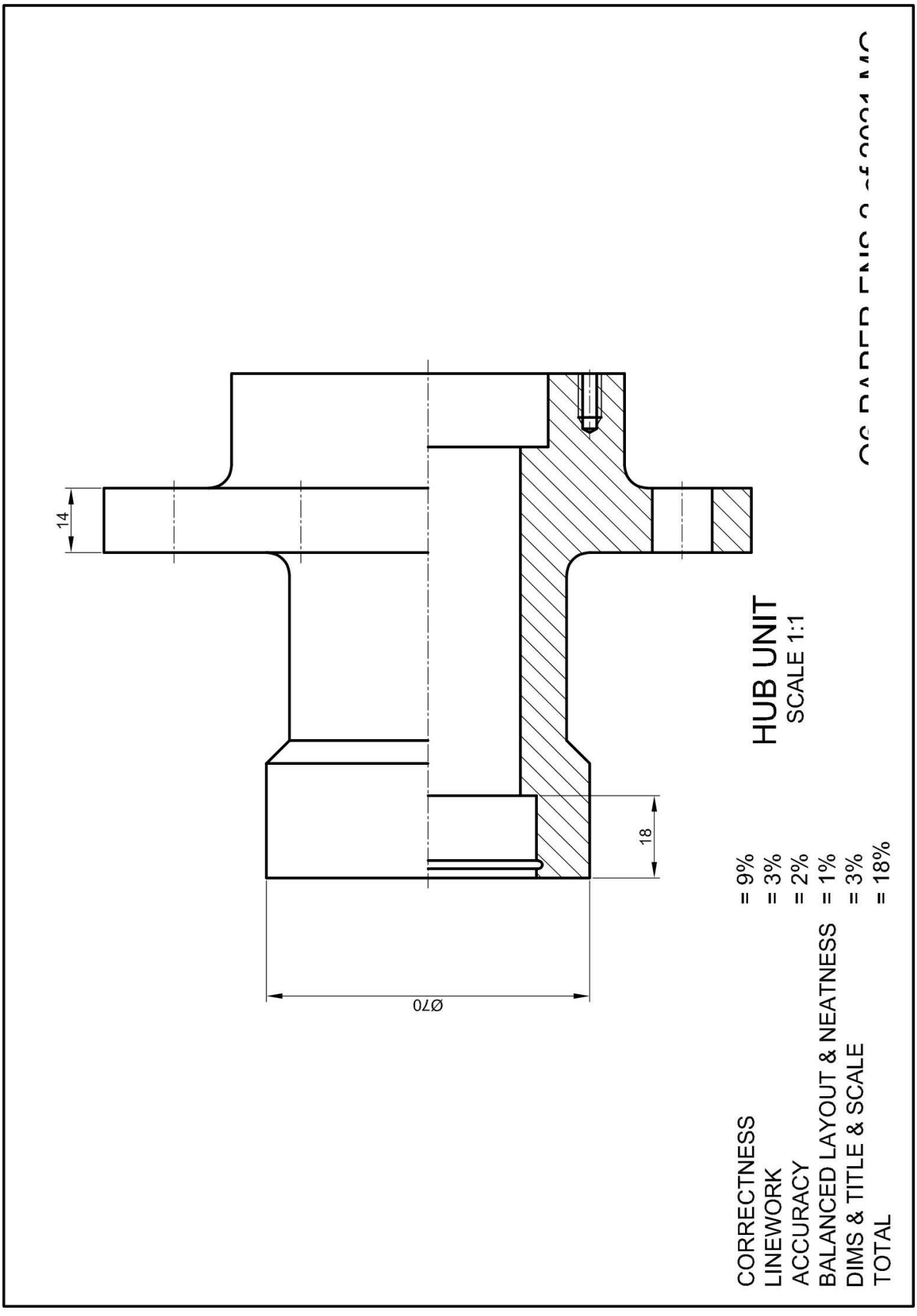

Kopiereg voorbehou