higher education & training

Department:
Higher Education and Training
REPUBLIC OF SOUTH AFRICA

NATIONAL CERTIFICATE: MULTIDISCIPLINARY DRAWING OFFICE PRACTICE

PICTORIAL DRAUGHTING

(8090214)

29 November 2023 (X-paper)
09:00–13:00

CLOSED-BOOK EXAMINATION

REQUIREMENTS: **One A2 drawing sheet**
One sheet of A4 draughting film or Gateway tracing paper

Drawing instruments and nonprogrammable calculators may be used.

This question paper consists of 4 pages, 5 diagram sheets and 1 formula sheet.

150Q1E2329

Copyright reserved

DEPARTMENT OF HIGHER EDUCATION AND TRAINING
REPUBLIC OF SOUTH AFRICA

NATIONAL CERTIFICATE: MULTIDISCIPLINARY DRAWING OFFICE PRACTICE
PICTORIAL DRAUGHTING
TIME: 4 HOURS
MARKS: 100

INSTRUCTIONS AND INFORMATION

1. Answer all the questions.
2. Read all the questions carefully.
3. Answer QUESTIONS 1, 2 and 3 on the front of the A2 DRAWING SHEET, QUESTIONS 4 and 5 on the reverse side of the A2 DRAWING SHEET and QUESTION 6 on the A4 DRAUGHTING FILM.
4. Draw a 15-mm border around both sides of the DRAWING SHEET.
5. Clearly indicate question numbers.
6. Complete all drawing work, including candidate information, in pencil on the A2 DRAWING SHEET and in draughting ink on the A4 DRAUGHTING FILM.
7. On completion, fold the A2 DRAWING SHEET to A3 size with the EXAMINATION NUMBER visible on the front. The DRAUGHTING FILM must be placed inside the folded A2 DRAWING SHEET. Do not use staples.
8. Use your discretion for dimensions not given.
9. Use a 3-mm fillet radius for all radii not given.
10. All drawing work must comply with the SABS 0111-1990 code of practice.
11. A balanced layout is very important and candidates will be penalised for poor planning.
12. Work neatly.

Copyright reserved

QUESTION 1: FREEHAND DRAWING

FIGURE 1, DIAGRAM SHEET 1 (attached) shows a single-view drawing of a locating plate.

By using only a pencil and eraser (no ruler), draw, freehand to scale 1:1 the given view of the locating plate. (12)

Add any FOUR dimensions – TWO radial and TWO linear dimensions – to the completed drawing together with a suitable title and scale centrally beneath the layout. (2)

SCALE 1:1

[14]

QUESTION 2: TWO-POINT PERSPECTIVE DRAWING

FIGURE 2, DIAGRAM SHEET 2 (attached) shows three views of a guide block in first-angle orthographic projection. Draw, using the measure point method, a two-point perspective drawing of the guide block. Point A is situated on the ground line (GL) in line with the centre of vision (CV) and up against the picture plane (PP). Line AB vanishes to the left at 45º. The distance of the eye in front of the PP is 130 mm and the height of the eye above the GL is 100 mm. (16)

Show ALL the necessary points on the construction, e.g. CV and vanishing points. (4)

SCALE 1:1

[20]

QUESTION 3: ISOMETRIC PROJECTION

FIGURE 3, DIAGRAM SHEET 3 (attached) shows three views of a support in first-angle orthographic projection.

DO NOT copy the given views, but construct a suitable isometric scale. (2)

Draw an isometric projection of the support. (18)

DO NOT show any hidden detail. DO NOT insert any dimensions.

SCALE 1:1

[20]

Copyright reserved

QUESTION 4: SQUARE SPRING CONSTRUCTION

Draw, according to scale 1:1, TWO full left-handed turns of a helical spring with the following details:

Outside diameter: 110 mm
Lead: 48 mm
Bar size: 16 mm^2

Show ALL construction lines on the drawing.

DO NOT show any hidden detail or calculations.

SCALE 1:1 **[14]**

QUESTION 5: GEAR TEETH CONSTRUCTION

FIGURE 4, DIAGRAM SHEET 4 (attached) shows a pictorial view of a gear and pinion in mesh, both made of mild steel.

DO NOT copy the given drawing, but draw to scale 1:1 an outside view as shown in the direction of the arrow marked B to show THREE complete teeth of only the gear constructed according to an approximate method. The remainder of the gear is to be drawn according to the conventional representation and the keyway must be drawn using empirical values. Use your own discretion for other details in the view. (10)

HINT: Use D/4 and D/12 to obtain the keyway size.

Show ALL construction lines, calculations and keyway parts on the drawing paper. (4)

SCALE 1:1

[14]

QUESTION 6: INK DRAWING

FIGURE 5, DIAGRAM SHEET 5 (attached) shows a front view and a full-sectional left view of a hub unit in first-angle orthographic projection.

Draw with ink pens according to scale 1:1 a half-sectional left view with the bottom half in section of the hub unit. (15)

Use your own discretion for dimensions not given.

Insert THREE dimensions on the completed drawing: ONE radial or diametrical dimension and TWO linear dimensions.

Print a suitable title and scale below the completed drawing. (3)

SCALE 1:1

[18]

TOTAL: 100

Copyright reserved

DIAGRAM SHEET 1

FIGURE 1

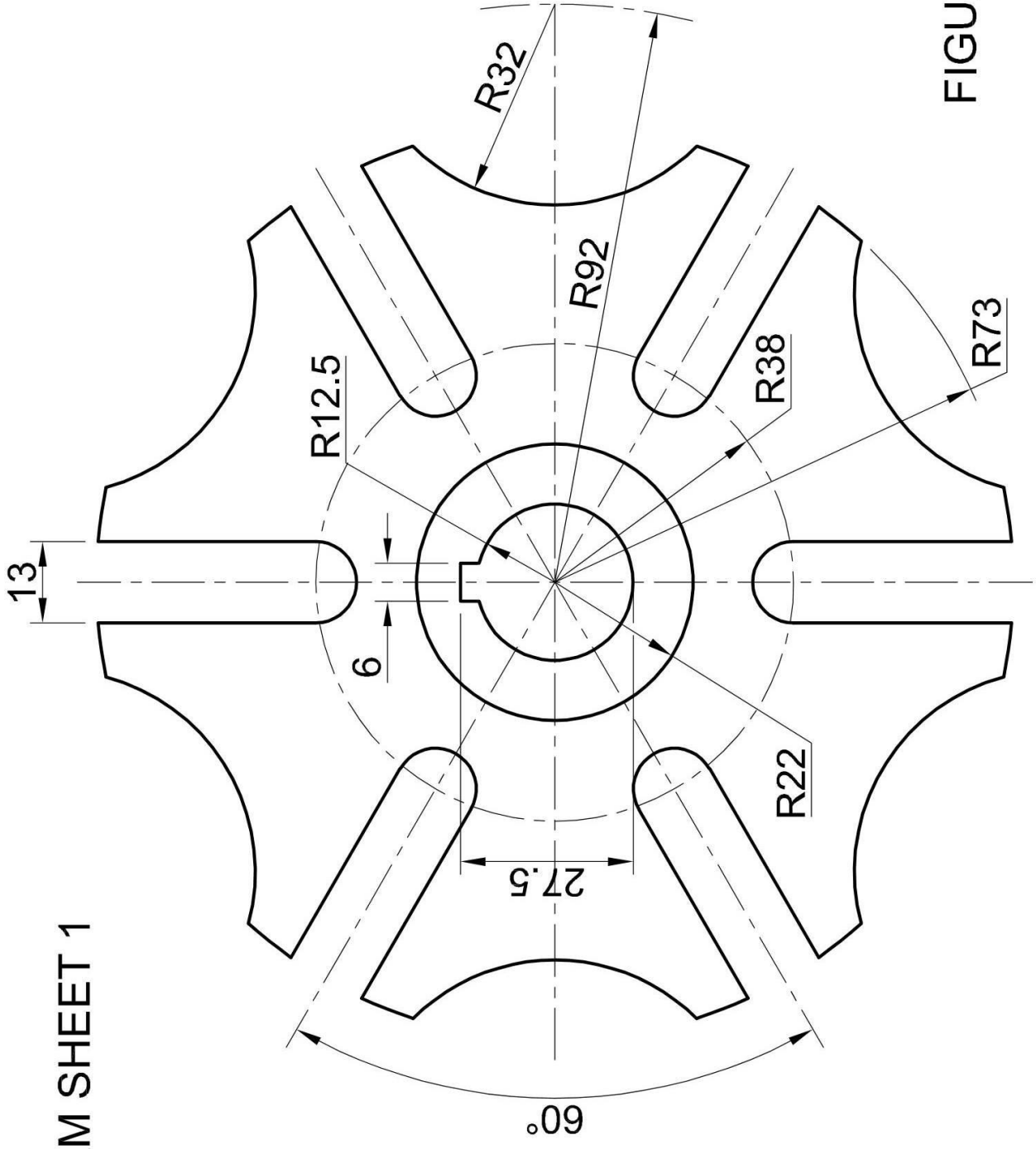

Copyright reserved

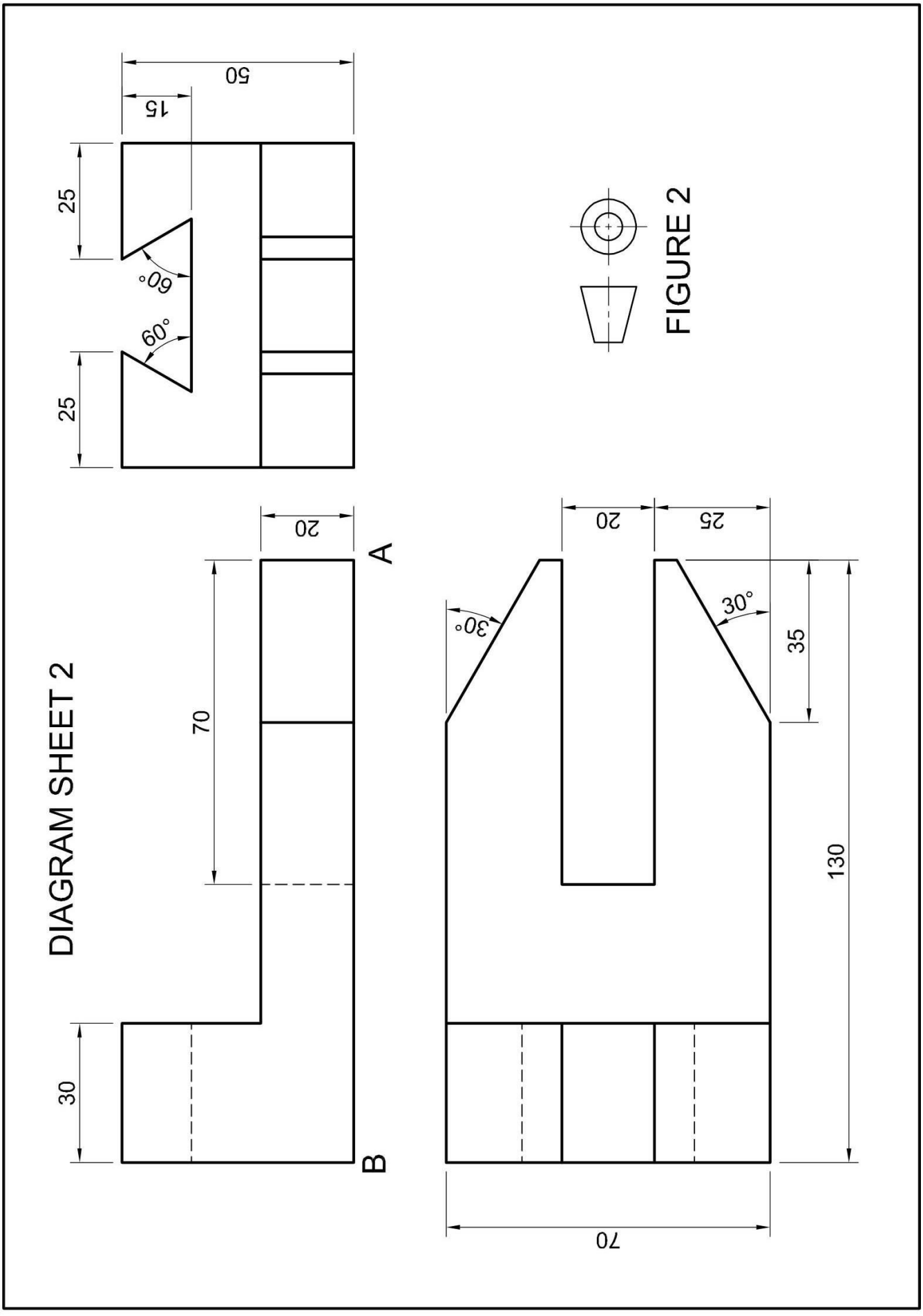
50
15
25
60°
60°
25
20
A
70
30
B
20
25
30°
30°
35
130
70
FIGURE 2
DIAGRAM SHEET 2

DIAGRAM SHEET 3

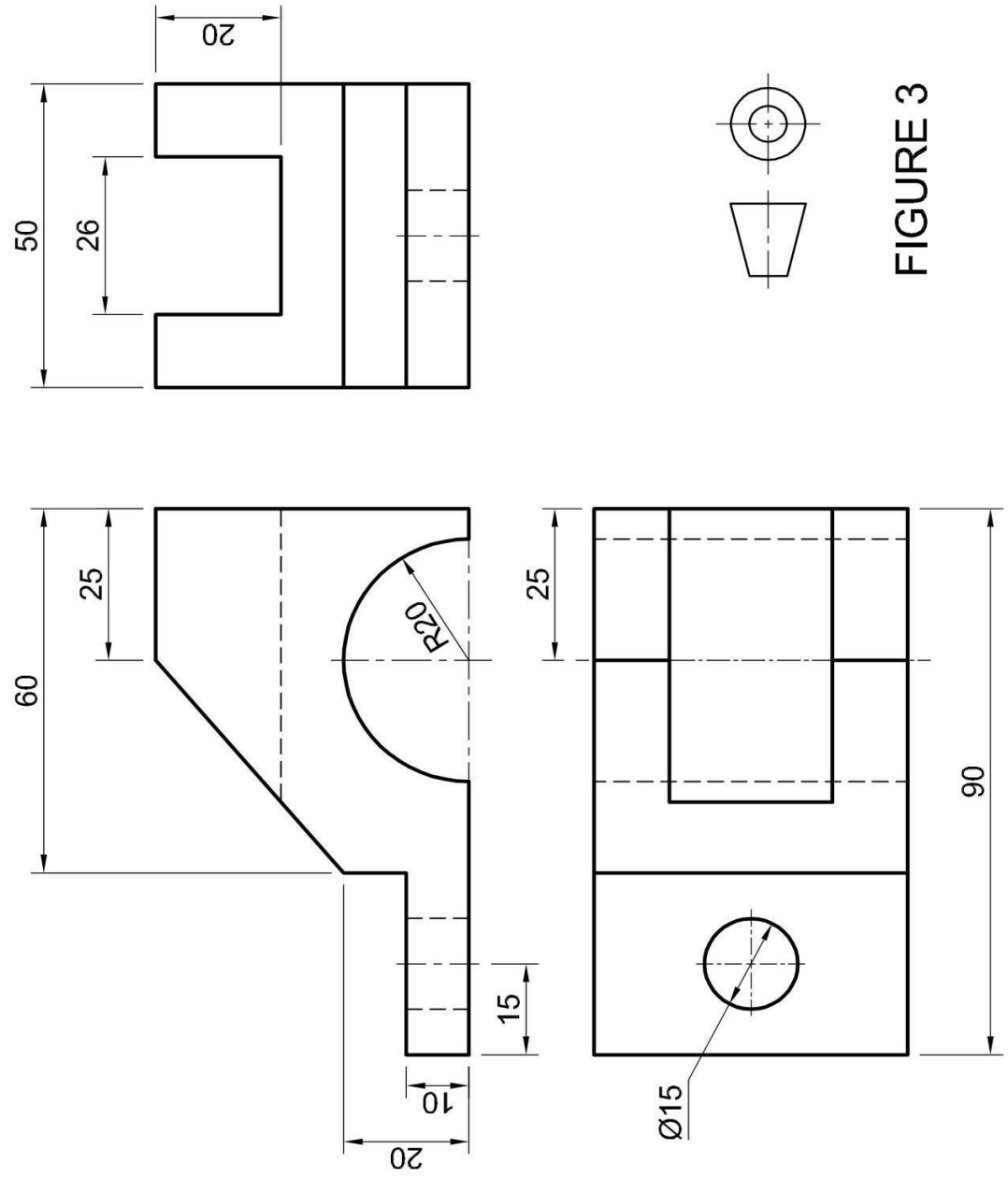

FIGURE 3

DIAGRAM SHEET 4



GEAR DATA
NO OF TEETH 24
PCD = 120mm
HOLE Ø = 20mm
DRAW TO SCALE 1:1

FIGURE 4

Copyright reserved

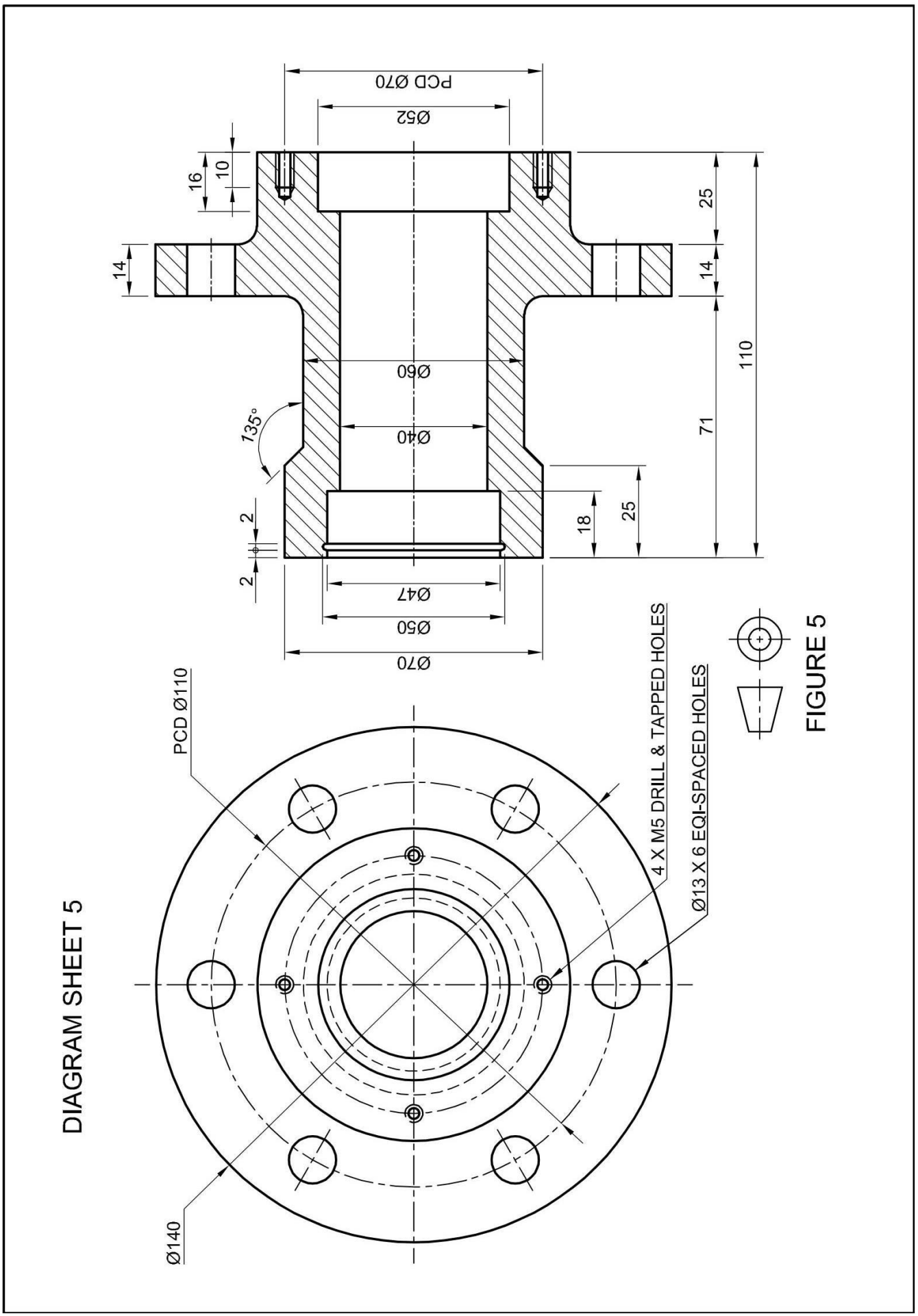

FIGURE 5

Copyright reserved

PICTORIAL DRAUGHTING

FORMULA SHEET

1. SCREW THREAD CONSTRUCTION

Length = (pitch × number of turns) + pitch/2

Pitch divisions = pitch/12

2. GEAR TEETH CONSTRUCTION

Module = addendum

Dedendum = 1,25 × module

PCD = module × number of teeth

Fillet radius = 0,3 × module

Circular pitch = 3,142 × module

3. SQUARE SPRING CONSTRUCTION

Length = (lead × number of turns) + material thickness

Copyright reserved