higher education & training

Department:
Higher Education and Training
REPUBLIC OF SOUTH AFRICA

MARKING GUIDELINE

NATIONAL CERTIFICATE

PICTORIAL DRAUGHTING

29 November 2023

This marking guideline consists of 8 pages

Copyright reserved

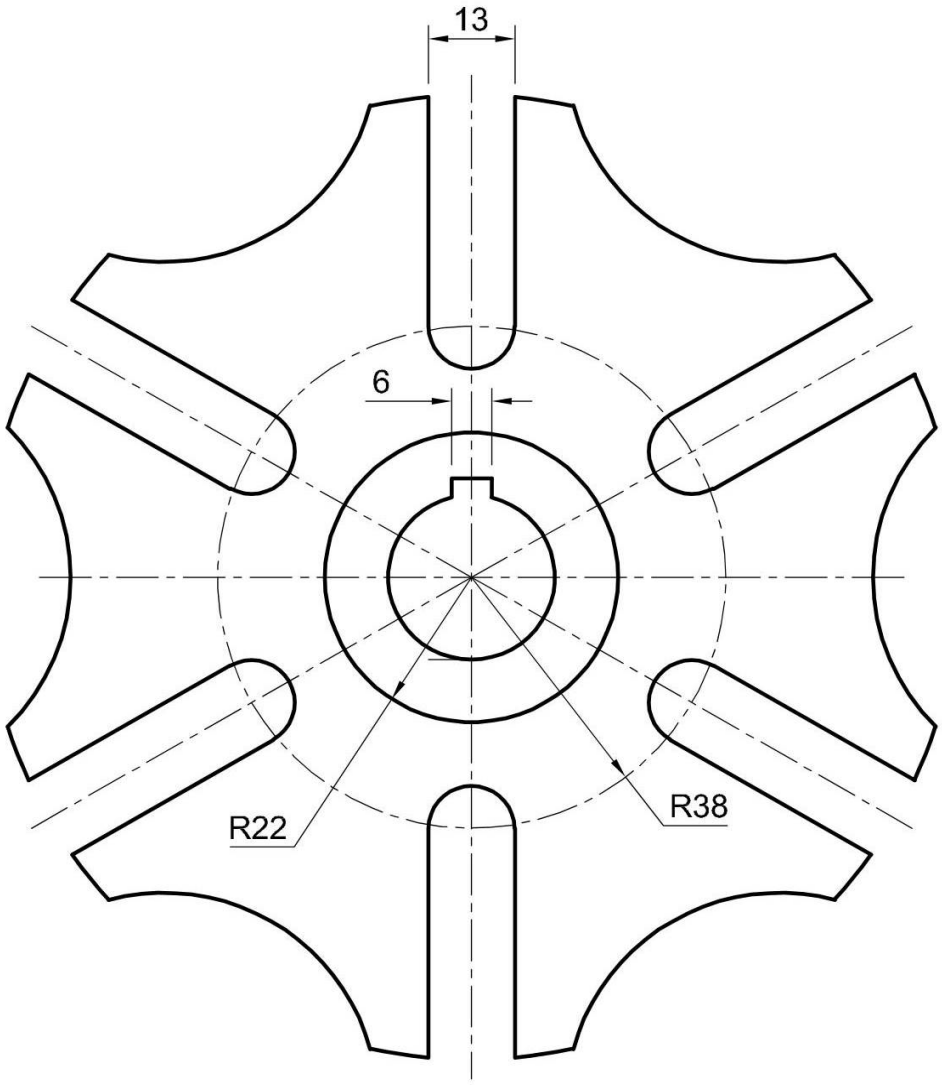

GUIDE PLATE

SCALE 1:1

PROPORTION	= 6%
LINEWORK	= 3%
ACCURACY	= 2%
BALANCE LAYOUT/NEATNESS	= 1%
DIMS & TITLE & SCALE	= 2%
TOTAL	= 14%

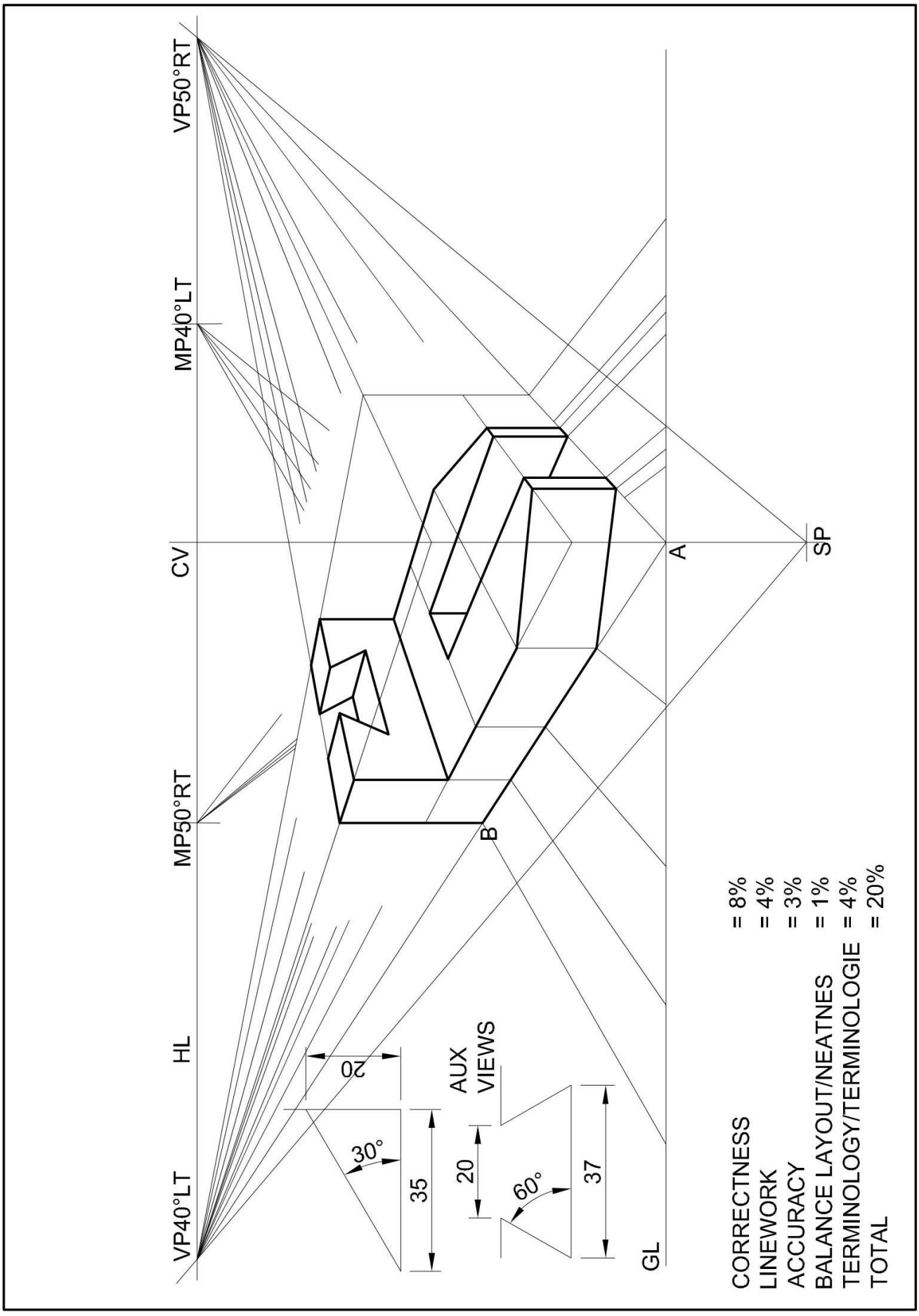
VP50°RT
MP40°LT
CV
SP
A
B
MP50°RT
HL
VP40°LT
GL
20
30°
35
AUX
VIEWS
20
60°
37
CORRECTNESS = 8%
LINEWORK = 4%
ACCURACY = 3%
BALANCE LAYOUT/NEATNES = 1%
TERMINOLOGY/TERMINOLOGIE = 4%
TOTAL = 20%

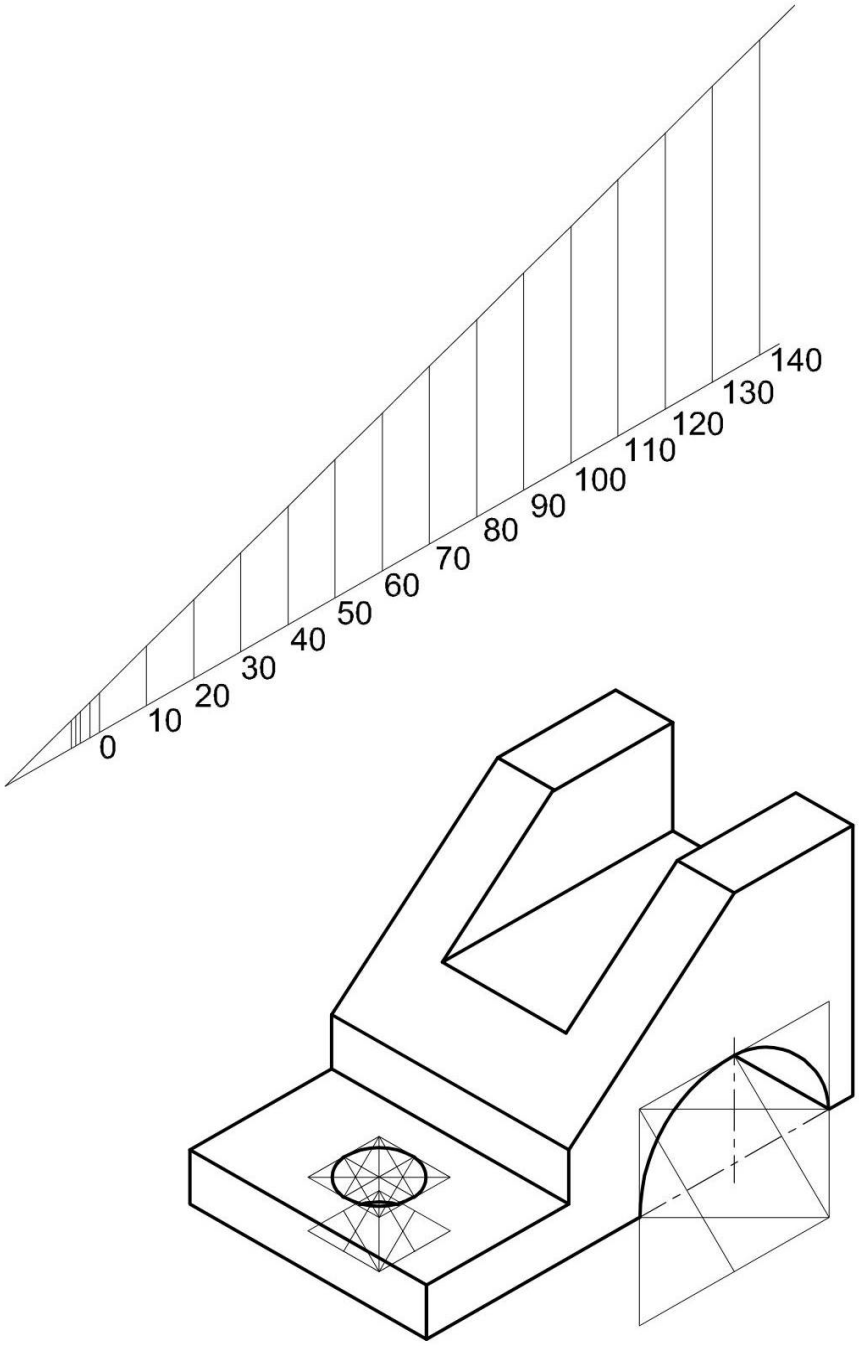

CORRECTNESS	= 9%
LINEWORK	= 4%
ACCURACY	= 3%
BALANCE LAYOUT/NEATNESS	= 2%
ISOMETRIC SCALE	= 2%
TOTAL	= 20%

Q3 PAPER ENS02 of 2021 MG

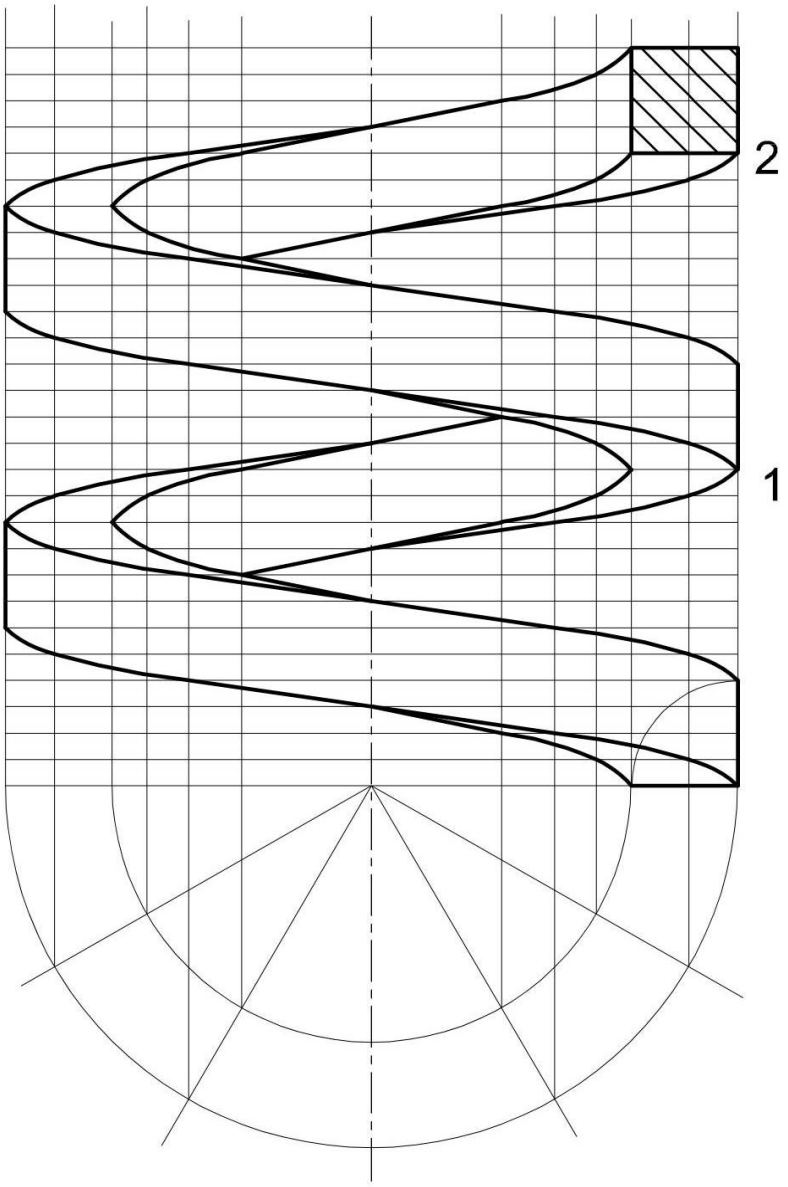

CORRECTNESS	= 7%
LINEWORK	= 4%
ACCURACY	= 2%
BALANCE LAYOUT/NEATNESS	= 1%
TOTAL	= 14%

Copyright reserved

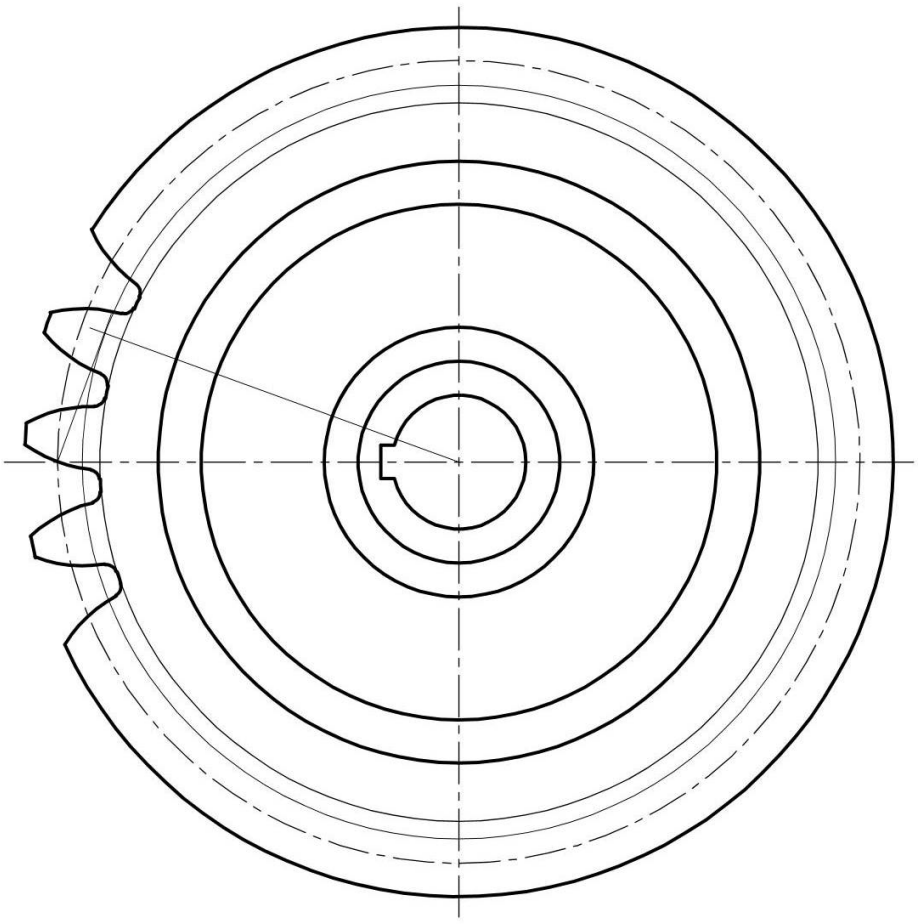

MOD = P.C.D./24
= 120/24
= 5

C.P. = 3,142 X M
= 3,142 X 5
= 15.71

TT = 15.71/2
= 7.855

CORRECTNESS	= 5%
LINEWORK	= 2,5%
ACCURACY	= 1,5%
BALANCE LAYOUT/NEATNESS	= 1%
CONSTR.& CALC.	= 4%
TOTAL	= 14%

Copyright reserved

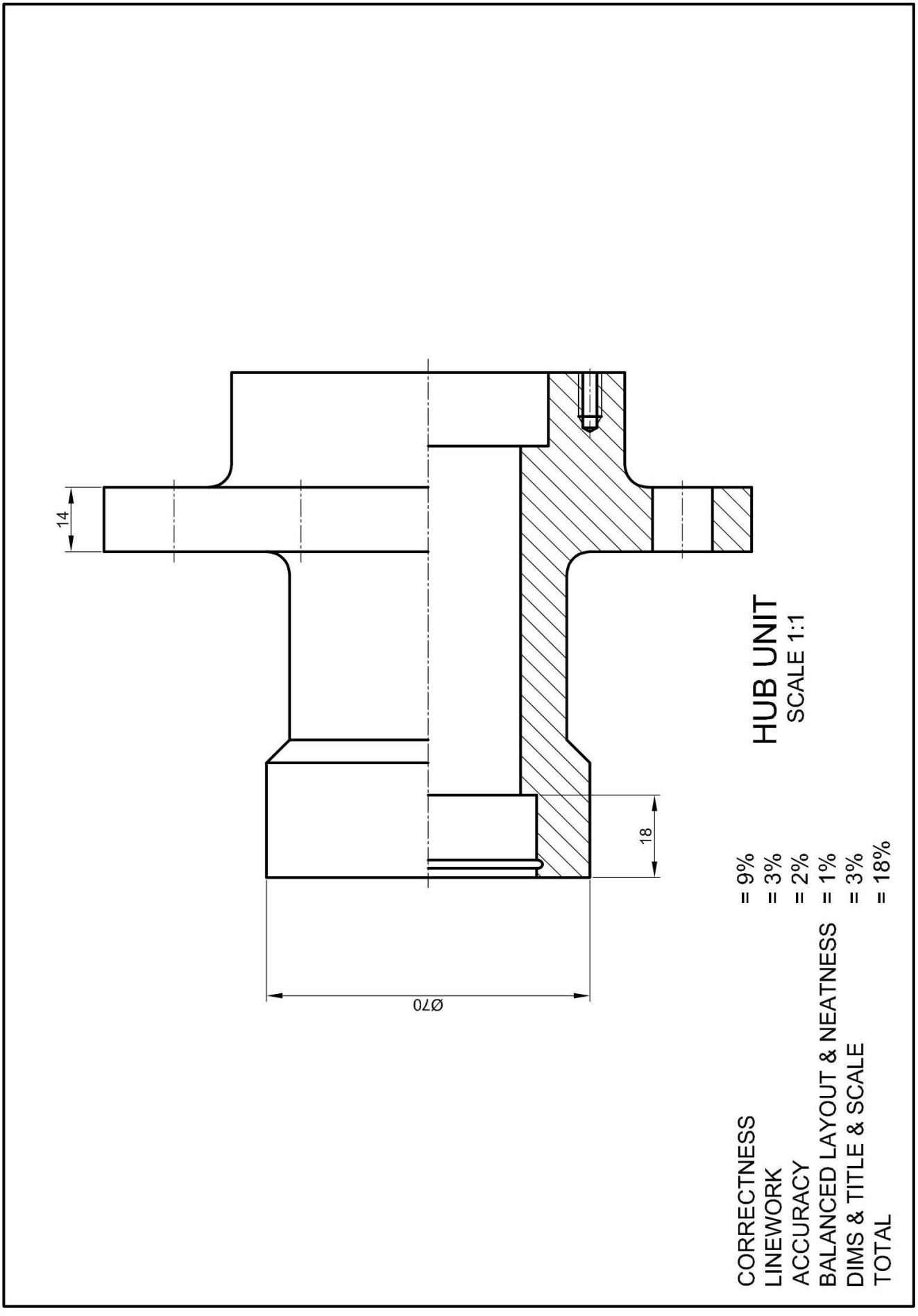

Copyright reserved